Client:
Project:
Type:
Quantity:

ALV SERIES AREA LIGHT

CONSTRUCTION

The sleek design single-piece die-cast AD12 aluminum housing has integral heat sink fins maximizing thermal management through conductive and convective cooling. The LED driver is mounted in direct contact with the housing for effective heat dissipation to promote low operating temp and long life. Housing is completely sealed against moisture and environmental contaminants (IP65). Ultra-low EPA rating.

Pole Mount

OPTICS (ROTATABLE)

UV-resistant acrylic optics, available in Type II, III, IV, V distributions. Silicone gasket ensures a weather-proof seal around each individual optics. Optics rotatable (90° increment) and interchangeable. Full cutoff (U0) when mounted with non-adjustable pole mount (SR) or 0 degree tilt with adjustable Slipfitter (SF), meets Dark Sky requirement. Optional backlight cover for optics available.

ELECTRICAL

80+ CRI Lumileds LED.
-40°C up to 50°C (-40°F up to 122°F) maximum operating temperature.
Long-life greater than 100,000 hr at L80.
Standard driver operates at 120-277V input, 0-10V dimmable driver, down to 10%.
50/60Hz, <20% THD, 0.9 power factor.
Standard 10kV surge protection included. Optional 347/480V input.

Standard Housing

Hi-Lumen Housing

SENSORS (OPTIONAL)

SENSOR-BLE-619 Integral PIR ALS Control Bluetooth/on/off/dimming/photosensing.
SENSOR-DC-PIR-OA AVI-ON PIR Bluetooth Sensor on/off/dimming/photosensing.
SENSOR-823 Integral PIR on/off/dimming/photosensing.
SENSOR-820 Integral PIR on/off/dimming/photosensing.
SENSOR-PH-PB-U Integral button style photocell.
SENSOR-PH-PT-U/UD/HD Twist lock dimming/non-dimming photocontrol.
CONTROL-LVFA AVI-ON Bluetooth Mesh Controller.
CONTROL-BLE-SK104-PH ALS Bluetooth Fixture Controller.

MOUNTING

3G rated (SR) mount allows lightning fast installation of ALS luminaires onto square or round pole application seamlessly. Optional adjustable slipfitter (SF) for 2-3/8" tenon, adjustable yoke mount (YM), and non-adjustable wall mount bracket (WM).

STANDARD FINISH

Corrosion resistant Dark Bronze powder coating finish.

CUSTOM FINISH

Corrosion resistant Black, Graphite Metallic, Gray, Silver, White, Custom RAL#.

CERTIFICATION

IP65 Wet location label standard.
Meets Buy America Act requirements.
Option for "BABAA" compliance upon request.
IDA compliant: with 3000K color temperature selection.
All luminaires are built to UL1598 standards and bear appropriate cETLus labels.
DLC® Premium (DesignLights Consortium Qualified).

WARRANTY

5 year warranty, see Limited Warranty for additional information.

OVERVIEW

Lumen Package	7,000 - 66,000
Wattage	40 - 450
CRI	80+
Efficacy Range (LPW)	145-180 (AVG.)
Life Expectancy (hr)	>100,000
Weights lbs (kg)	22 (9.9) / 30 (13.6)
Quick Ship	Yes

ALS®
Advantage Lighting Solutions

ALV SERIES AREA LIGHT

ORDER INFORMATION

EXAMPLE : ALV 100 40 T3 DB UNVD

Fixture	Series	Power & LM	CCT	Distribution	Finish	Input
	ALV					

A SERIES

ALV	ALV Series Architectural Area Light

B POWER & LM* *Custom Lumen Package per request - consult factory

STANDARD HOUSING - DUAL-BOARD

Code	Power & LM	LPW
40	40W, 7,000lm	180
60	60W, 10,000lm	172
75	75W, 13,250lm	172
100	100W, 16,000lm	170
150	150W, 24,000lm	159
200	200W, 30,000lm	150
225	225W, 33,000lm	147

HI-LUMEN HOUSING - QUAD-BOARD

Code	Power & LM	LPW
250	250W, 40,000lm	162
300	300W, 47,000lm	157
320	320W, 49,000lm	157
400	400W, 60,000lm	148
425	425W, 63,000lm	148
450	450W, 66,000lm	145

C CCT

30	3000K	**50**	5000K
40	4000K		

D DISTRIBUTION

T2	Type II	**T4**	Type IV
T3	Type III	**T5**	Type V

Optics Rotation

LL	Optics Rotate 90° Left	**RR**	Optics Rotate 90° Right

E FINISH

Standard

DB Dark Bronze

Custom Color

CC	**BK**	Black	**GM**	Graphite Metallic	**GR**	Gray
	SV	Silver	**WH**	White	**RAL#**	

F INPUT

UNVD	120-277V, 0-10V Dimmable	**HVLD**	347-480V, 0-10V Dimmable

ORDER INFORMATION (CONTINUED)

Mounting		Accessories Options	

G MOUNTING

MOUNT-ALV-SF	Adjustable Slipfitter	**MOUNT-ALV-SR**	Non-Adjustable Square/Round Pole Mount
MOUNT-ALV-WM	Non-Adjustable Wall Mount	**MOUNT-ALV-YM**	Adjustable Yoke Mount

H ACCESSORIES/OPTIONS

BAA	Assembled in America, compliant with BAA (COTS)
BABAA	Build America, Buy America Act (BABAA) Compliant / Made with Hi-Lumen Housing Only
FAD	Customized Output (Consult Factory)
SHIELD-ALV**	Backlight Control on Lens (Standard Housing 2:1) (Hi-Lumen Housing 4:1)
SHIELD-ALV-150**	Standard Housing Metal House-Side Shield on Fixture, Matching Fixture Finish Color (1:1)
SHIELD-ALV-450**	Hi-Lumen Housing Metal House-Side Shield on Fixture, Matching Fixture Finish Color (1:1)
VISOR-ALV-150**	Standard Housing Metal 4-Side Visor on Fixture, Matching Fixture Finish Color (1:1)
VISOR-ALV-450**	Hi-Lumen Housing Metal 4-Side Visor on Fixture, Matching Fixture Finish Color (1:1)
SENSOR-BLE-619-L3 / L4*	Integral PIR Bluetooth Daylight Sensor (ALS Control Mobile App) / **L3:** up to 40FT, **L4:** up to 8FT
SENSOR-DC-PIR-OA	AVI-ON PIR Bluetooth Sensor on/off/dimming/photosensing for outdoor use
SENSOR-PH-PB-U*	Button Style Photocell
SENSOR-PH-PT-U / UD / HD*	Twist Lock Photocell / **U:** 120-277V, **UD:** 120-277V, **HD:** 480V input
SENSOR-823-L3 / L4*	Integral PIR On/Off/Dimming/Photosensing / **L3:** up to 40FT, **L4:** up to 8FT
SENSOR-820*	Integral PIR On/Off/Dimming/Photosensing
REMOTE-RC100	Handheld Remote Commissioning Tool for SENSOR-ANT, 823, 820 Series
CONTROL-LVFA*	AVI-ON Bluetooth Mesh Control System (12V DC Power by Driver)
CONTROL-BLE-SK104-PH*	Integral Bluetooth Fixture Controller w/Button Photocell (ALS Control Mobile App)
EMB-8W-B*	90-Minute Self-Diagnostic Emergency Battery 8W 100-347VAC Input 170VDC Output*
EMB-18W-B*	90-Minute Self-Diagnostic Emergency Battery 18W 100-347VAC Input 170VDC Output*
EMB-18W-C-B*	90-Minute Self-Diagnostic Emergency Battery 18W 100-347VAC Input 170VDC Output -20°C-50°C (-4°F-122°F)*
	*Compatible w/ ALV Hi-Lumen Housing Only, MAX @ 225W Normal Output

*see pages 12-13 for sensor and EMB spec

**see page 11 for Shield spec

ALV SERIES AREA LIGHT

DIMENSIONS - STANDARD HOUSING

Model	L	W	H1	H2
Standard Housing Dual Board w/SR Pole Mount	21.14” (537mm)	13.32” (338mm)	2.57” (65mm)	6.01” (153mm)

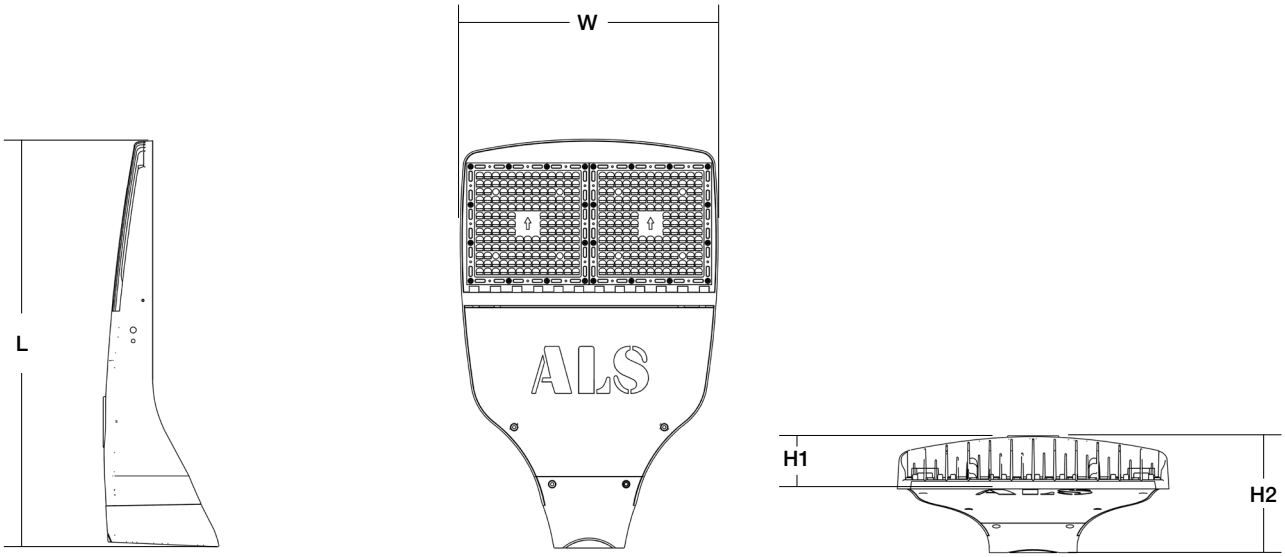

OPTICS ROTATION

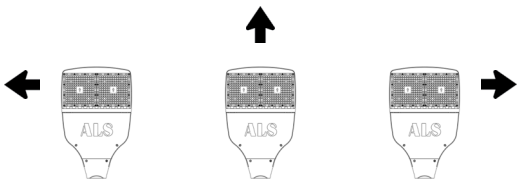

Optics Rotated Right | Forward | Optics Rotated Left

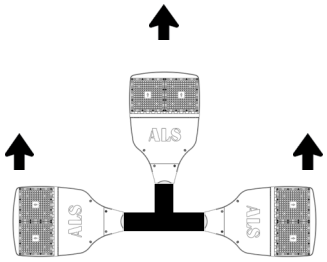

Optics Rotated Left | Forward | Optics Rotated Right

EPA (ft^2)

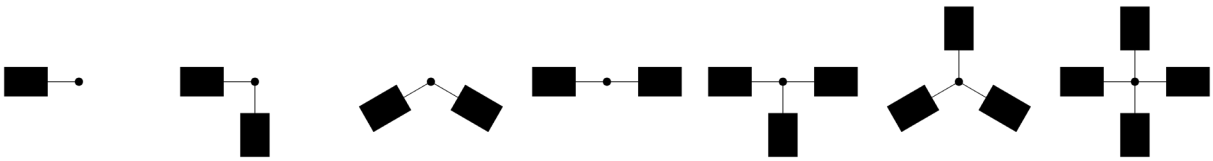

Mounting Option	Single	2 @ 90°	2 @ 120°	2 @ 180°	3 @ 90°	3 @ 120°	4 @ 90°
Standard Housing	0.238	0.456	0.633	0.533	0.829	0.851	0.829

Advantage Lighting Solutions® - All Rights Reserved

ALV SERIES AREA LIGHT

DIMENSIONS - HI-LUMEN HOUSING

Model	L	W	H1	H2
Hi-Lumen Housing Quad Board w/SR Pole Mount	29.15” (740mm)	13.32” (338mm)	2.57” (65mm)	6.01” (153mm)

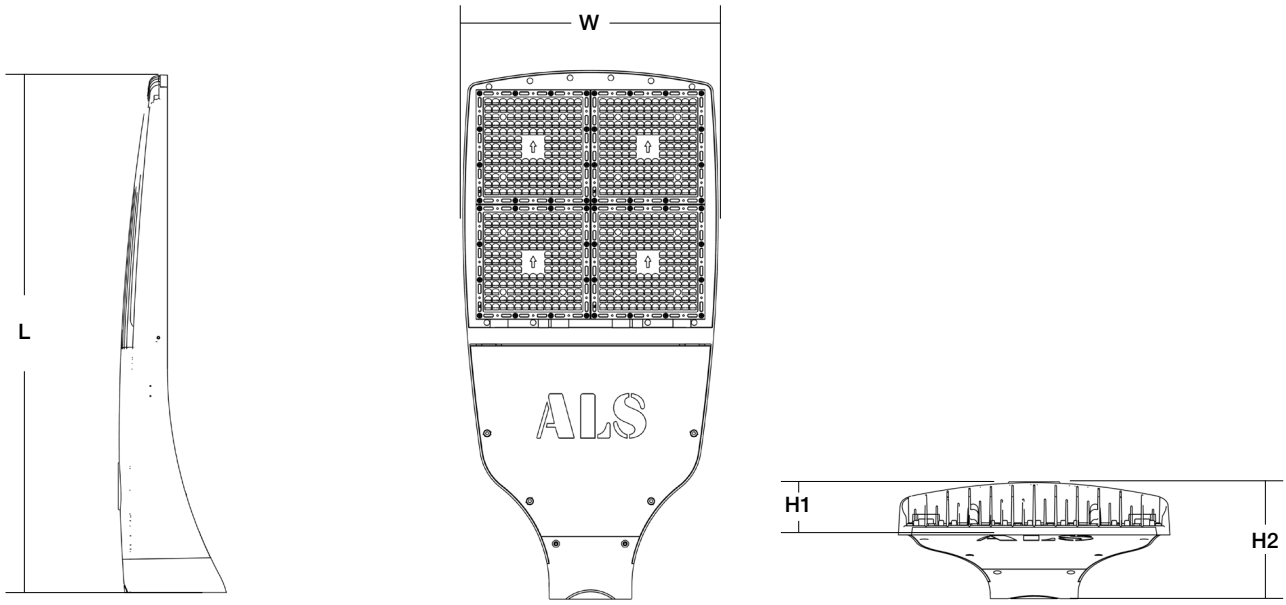

OPTICS ROTATION

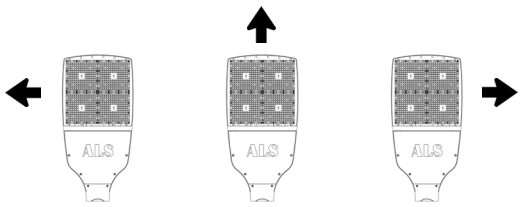

Optics Rotated Right | Forward | Optics Rotated Left

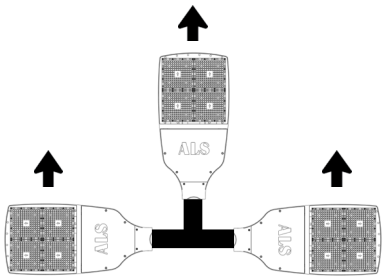

Optics Rotated Left | Forward | Optics Rotated Right

EPA (ft²)

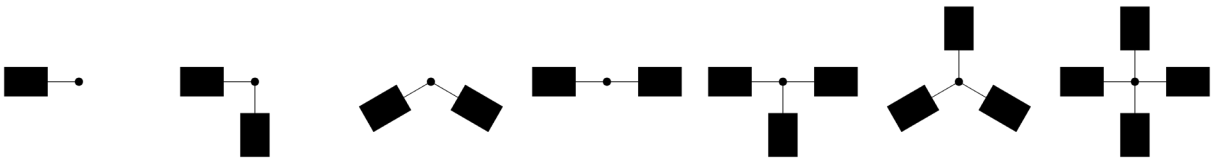

Mounting Option	Single	2 @ 90°	2 @ 120°	2 @ 180°	3 @ 90°	3 @ 120°	4 @ 90°
Hi-Lumen Housing	0.313	0.544	0.732	0.626	0.866	0.963	0.866

Advantage Lighting Solutions® - All Rights Reserved

ALV SERIES AREA LIGHT

PERFORMANCE DATA

SYSTEM WATTS	DIST. TYPE	3000K			4000K			5000K		
		LUMEN	LPW	BUG RATING	LUMEN	LPW	BUG RATING	LUMEN	LPW	BUG RATING
ALV-40 @ 40W	II	6880	171	B1-U0-G1	7105	176	B1-U0-G1	7180	178	B2-U0-G2
	III	6758	168	B2-U0-G1	6979	174	B2-U0-G1	7053	175	B2-U0-G1
	IV	6766	168	B1-U0-G2	6987	174	B1-U0-G2	7061	176	B1-U0-G2
	V	6917	172	B3-U0-G1	7143	178	B3-U0-G1	7219	180	B3-U0-G2
SHIELD-ALV-XX @ 40W	II	6477	161	B1-U0-G2	6752	168	B1-U0-G2	6817	170	B1-U0-G2
	III	6297	156	B1-U0-G2	6564	163	B1-U0-G2	6627	164	B1-U0-G2
	IV	6424	160	B1-U0-G2	6697	166	B1-U0-G2	6762	168	B1-U0-G2
	V	5955	148	B1-U0-G3	6208	154	B1-U0-G3	6268	156	B1-U0-G3
ALV-60 @ 60W	II	9896	164	B2-U0-G2	10220	169	B2-U0-G2	10328	171	B2-U0-G2
	III	9721	161	B2-U0-G2	10039	167	B2-U0-G2	10145	168	B2-U0-G2
	IV	9732	161	B2-U0-G2	10050	167	B2-U0-G2	10157	169	B2-U0-G2
	V	9950	165	B3-U0-G2	10275	170	B4-U0-G2	10384	172	B4-U0-G2
SHIELD-ALV-XX @ 60W	II	9317	155	B2-U0-G2	9712	161	B2-U0-G2	9806	163	B2-U0-G2
	III	9057	150	B2-U0-G3	9442	156	B2-U0-G3	9533	158	B2-U0-G3
	IV	9241	153	B1-U0-G2	9633	160	B1-U0-G2	9727	161	B1-U0-G2
	V	8566	142	B2-U0-G3	8929	148	B2-U0-G3	9016	149	B2-U0-G3
ALV-75 @ 75W	II	12490	165	B2-U0-G2	12899	170	B2-U0-G2	13036	172	B2-U0-G2
	III	12269	162	B2-U0-G2	12671	168	B2-U0-G2	12805	169	B2-U0-G2
	IV	12283	162	B2-U0-G2	12685	168	B2-U0-G2	12820	170	B2-U0-G2
	V	12258	166	B4-U0-G2	12969	172	B4-U0-G2	13106	173	B4-U0-G2
SHIELD-ALV-XX @ 75W	II	11759	156	B2-U0-G3	12258	162	B2-U0-G3	12377	164	B2-U0-G3
	III	11432	151	B2-U0-G3	11917	157	B2-U0-G3	12032	159	B2-U0-G3
	IV	11664	154	B2-U0-G3	12158	161	B2-U0-G3	12276	162	B2-U0-G3
	V	10811	143	B2-U0-G3	11270	149	B2-U0-G3	11379	150	B2-U0-G3
ALV-100 @ 100W	II	15572	161	B3-U0-G3	16082	167	B3-U0-G3	16252	168	B3-U0-G3
	III	15297	159	B3-U0-G3	15797	164	B3-U0-G3	15967	166	B3-U0-G3
	IV	15314	159	B2-U0-G2	15815	164	B2-U0-G2	15983	166	B2-U0-G2
	V	15656	162	B4-U0-G2	16169	168	B4-U0-G2	16340	170	B4-U0-G2
SHIELD-ALV-XX @ 100W	II	14661	152	B2-U0-G3	15283	159	B2-U0-G3	15431	160	B2-U0-G3
	III	14252	148	B2-U0-G3	14857	154	B3-U0-G3	15001	155	B3-U0-G3
	IV	14541	151	B2-U0-G3	15158	157	B2-U0-G3	15305	159	B2-U0-G3
	V	13479	140	B2-U0-G4	14051	146	B2-U0-G4	14187	147	B2-U0-G4
ALV-125 @ 125W	II	19608	156	B3-U0-G3	20250	161	B3-U0-G3	20465	163	B3-U0-G3
	III	19261	154	B3-U0-G3	19891	159	B3-U0-G3	20102	161	B3-U0-G3
	IV	19283	154	B3-U0-G3	19914	159	B3-U0-G3	20125	161	B3-U0-G3
	V	19715	157	B4-U0-G2	20360	163	B4-U0-G3	20576	164	B5-U0-G3
SHIELD-ALV-XX @ 125W	II	18461	148	B3-U0-G3	19244	154	B3-U0-G3	19431	155	B3-U0-G3
	III	17947	143	B3-U0-G3	18708	149	B3-U0-G3	18889	151	B3-U0-G3
	IV	18310	146	B2-U0-G3	19087	152	B2-U0-G3	19272	154	B2-U0-G3
	V	16973	135	B3-U0-G4	17693	141	B3-U0-G4	17864	143	B3-U0-G4
ALV-150 @ 150W	II	22982	151	B3-U0-G3	23735	157	B3-U0-G3	23986	158	B3-U0-G3
	III	22576	149	B3-U0-G3	23315	154	B3-U0-G3	23562	156	B3-U0-G3
	IV	22601	149	B3-U0-G3	23341	155	B3-U0-G3	23589	156	B3-U0-G3
	V	23107	153	B5-U0-G3	23864	158	B5-U0-G3	24117	159	B5-U0-G3
SHIELD-ALV-XX @ 150W	II	21638	143	B3-U0-G3	22556	149	B3-U0-G3	22775	151	B3-U0-G3
	III	21035	139	B3-U0-G4	21927	145	B3-U0-G4	22140	146	B3-U0-G4
	IV	21462	142	B3-U0-G3	22372	148	B3-U0-G3	22589	149	B3-U0-G3
	V	19894	131	B3-U0-G5	20738	137	B3-U0-G5	20939	138	B3-U0-G5

Advantage Lighting Solutions® - All Rights Reserved

PERFORMANCE DATA (CONTINUED)

SYSTEM WATTS	DIST. TYPE	3000K			4000K			5000K		
		LUMEN	LPW	BUG RATING	LUMEN	LPW	BUG RATING	LUMEN	LPW	BUG RATING
ALV-180 @ 180W	II	26421	146	B3-U0-G3	27284	151	B3-U0-G3	27573	153	B3-U0-G3
	III	25951	144	B3-U0-G3	26801	149	B3-U0-G3	27084	150	B3-U0-G3
	IV	25981	144	B3-U0-G4	26832	149	B3-U0-G4	27116	151	B3-U0-G4
	V	26562	147	B5-U0-G3	27432	153	B5-U0-G3	27723	154	B5-U0-G3
SHIELD-ALV-XX @ 180W	II	24873	138	B3-U0-G4	25929	144	B3-U0-G4	26180	146	B3-U0-G4
	III	24181	134	B3-U0-G4	25206	140	B3-U0-G4	25451	141	B3-U0-G4
	IV	24671	137	B3-U0-G4	25718	143	B3-U0-G4	25967	144	B3-U0-G4
	V	22868	127	B3-U0-G5	23839	132	B3-U0-G5	24070	134	B3-U0-G5
ALV-200 @ 200W	II	28563	142	B3-U0-G3	29498	147	B3-U0-G3	29811	149	B3-U0-G3
	III	28058	140	B3-U0-G3	28976	145	B3-U0-G3	29283	146	B3-U0-G3
	IV	28090	141	B3-U0-G4	29009	145	B3-U0-G4	29317	147	B3-U0-G4
	V	28718	144	B5-U0-G3	29658	148	B5-U0-G3	29973	150	B5-U0-G4
SHIELD-ALV-XX @ 200W	II	26892	135	B3-U0-G4	28033	140	B3-U0-G4	28305	142	B3-U0-G4
	III	26143	131	B3-U0-G4	27252	136	B3-U0-G4	27517	137	B3-U0-G4
	IV	26673	133	B3-U0-G4	27805	139	B3-U0-G4	28075	140	B3-U0-G4
	V	24724	124	B3-U0-G5	25773	129	B3-U0-G5	26023	130	B3-U0-G5
ALV-225 @ 225W	II	31492	140	B3-U0-G3	32523	145	B3-U0-G3	32868	146	B3-U0-G3
	III	30935	138	B4-U0-G3	31948	142	B4-U0-G4	32286	144	B4-U0-G4
	IV	30970	138	B3-U0-G4	31984	143	B3-U0-G4	32322	144	B3-U0-G4
	V	31665	141	B5-U0-G4	32700	146	B5-U0-G4	33046	147	B5-U0-G4
SHIELD-ALV-XX @ 225W	II	29650	132	B3-U0-G4	30908	138	B3-U0-G4	31208	139	B3-U0-G4
	III	28824	128	B3-U0-G4	30047	134	B3-U0-G5	30338	135	B3-U0-G5
	IV	29408	131	B3-U0-G4	30656	137	B3-U0-G4	30954	138	B3-U0-G4
	V	27260	121	B3-U0-G5	28416	127	B3-U0-G5	28692	128	B3-U0-G5
ALV-250 @ 250W	II	38755	155	B4-U0-G4	39773	159	B4-U0-G4	40457	162	B4-U0-G4
	III	38089	152	B4-U0-G4	39090	156	B4-U0-G4	39762	159	B4-U0-G4
	IV	38134	152	B3-U0-G4	39136	156	B3-U0-G4	39809	159	B3-U0-G4
	V	38827	155	B5-U0-G4	39847	159	B5-U0-G4	40532	162	B5-U0-G4
SHIELD-ALV-XX @ 250W	II	37179	149	B3-U0-G4	38167	152	B3-U0-G4	38816	156	B3-U0-G5
	III	46043	144	B3-U0-G5	37002	147	B3-U0-G5	37631	150	B3-U0-G5
	IV	36592	147	B3-U0-G5	37565	150	B3-U0-G5	38204	153	B3-U0-G5
	V	34467	138	B4-U0-G5	35384	141	B4-U0-G5	35985	144	B4-U0-G5
ALV-300 @ 300W	II	45253	150	B4-U0-G4	46442	154	B4-U0-G4	47241	157	B4-U0-G4
	III	44474	147	B4-U0-G4	45643	151	B4-U0-G4	46428	154	B4-U0-G4
	IV	44529	148	B4-U0-G5	45699	151	B4-U0-G5	46485	154	B4-U0-G5
	V	45337	150	B5-U0-G4	46528	154	B5-U0-G4	47329	157	B5-U0-G4
SHIELD-ALV-XX @ 300W	II	43413	144	B3-U0-G5	44567	148	B3-U0-G5	45325	151	B3-U0-G5
	III	42087	139	B4-U0-G5	43206	143	B4-U0-G5	43941	146	B4-U0-G5
	IV	42728	142	B3-U0-G5	43864	145	B3-U0-G5	44610	148	B3-U0-G5
	V	40247	134	B4-U0-G5	41317	137	B4-U0-G5	42019	140	B4-U0-G5
ALV-320 @ 320W	II	47056	151	B4-U0-G4	48292	155	B4-U0-G4	49123	157	B4-U0-G4
	III	46248	148	B4-U0-G4	47463	152	B4-U0-G4	48280	155	B4-U0-G4
	IV	46302	148	B4-U0-G5	47519	152	B4-U0-G5	48336	155	B4-U0-G5
	V	47143	151	B5-U0-G4	48382	155	B5-U0-G4	49214	158	B5-U0-G4
SHIELD-ALV-XX @ 320W	II	45142	145	B3-U0-G5	46342	148	B3-U0-G5	47130	151	B4-U0-G5
	III	43763	140	B4-U0-G5	44927	143	B4-U0-G5	45691	146	B4-U0-G5
	IV	44430	143	B3-U0-G5	45611	146	B3-U0-G5	46387	149	B3-U0-G5
	V	41849	134	B4-U0-G5	42962	137	B4-U0-G5	43693	140	B4-U0-G5

Advantage Lighting Solutions® - All Rights Reserved

PERFORMANCE DATA (CONTINUED)

SYSTEM WATTS	DIST. TYPE	3000K			4000K			5000K		
		LUMEN	LPW	BUG RATING	LUMEN	LPW	BUG RATING	LUMEN	LPW	BUG RATING
ALV-400 @ 400W	II	57690	142	B4-U0-G4	59206	145	B4-U0-G5	60224	148	B4-U0-G5
	III	56700	139	B5-U0-G5	58190	143	B5-U0-G5	59191	145	B5-U0-G5
	IV	56766	139	B4-U0-G5	58258	143	B4-U0-G5	59260	145	B4-U0-G5
	V	57797	142	B5-U0-G5	59316	145	B5-U0-G5	60336	148	B5-U0-G5
SHIELD-ALV-XX @ 400W	II	55344	136	B4-U0-G5	56815	139	B4-U0-G5	57781	142	B4-U0-G5
	III	53654	132	B4-U0-G5	55080	135	B4-U0-G5	56017	137	B4-U0-G5
	IV	54471	134	B3-U0-G5	55919	137	B3-U0-G5	56870	140	B3-U0-G5
	V	51307	126	B5-U0-G5	52672	129	B5-U0-G5	53567	132	B5-U0-G5
ALV-425 @ 425W	II	60245	142	B4-U0-G5	61828	145	B4-U0-G5	62892	148	B4-U0-G5
	III	59212	139	B5-U0-G5	60767	143	B5-U0-G5	61812	145	B5-U0-G5
	IV	59281	139	B4-U0-G5	60838	143	B4-U0-G5	61884	145	B4-U0-G5
	V	60357	142	B5-U0-G5	61943	145	B5-U0-G5	63008	148	B5-U0-G5
SHIELD-ALV-XX @ 425W	II	57795	136	B4-U0-G5	59331	139	B4-U0-G5	60340	142	B4-U0-G5
	III	56030	132	B4-U0-G5	57520	135	B4-U0-G5	58498	137	B4-U0-G5
	IV	56884	134	B3-U0-G5	58396	137	B3-U0-G5	59389	140	B3-U0-G5
	V	53580	126	B5-U0-G5	55004	129	B5-U0-G5	55940	132	B5-U0-G5
ALV-450 @ 450W	II	63285	139	B4-U0-G5	64948	142	B5-U0-G5	66065	145	B5-U0-G5
	III	62201	136	B5-U0-G5	63835	140	B5-U0-G5	64933	142	B5-U0-G5
	IV	62272	136	B4-U0-G5	63908	140	B4-U0-G5	65007	142	B4-U0-G5
	V	63403	139	B5-U0-G5	65068	142	B5-U0-G5	66187	145	B5-U0-G5
SHIELD-ALV-XX @ 450W	II	60711	133	B4-U0-G5	62325	136	B4-U0-G5	63385	139	B4-U0-G5
	III	58857	129	B4-U0-G5	60422	132	B4-U0-G5	61449	135	B4-U0-G5
	IV	59754	131	B3-U0-G5	61343	134	B4-U0-G5	62385	137	B4-U0-G5
	V	56283	126	B5-U0-G5	57780	129	B5-U0-G5	58762	131	B5-U0-G5

Advantage Lighting Solutions® - All Rights Reserved

DLC CODE

Part Number	DLC Product ID	DLC Class
ALV-10040T2-DBUNVD	PPMU9Y6U	Premium
ALV-10040T3-DBUNVD	PM744Q8P	Premium
ALV-10040T4-DBUNVD	PKI2XIPJ	Premium
ALV-10040T5-DBUNVD	P2XHEURH	Premium
ALV-10050T2-DBUNVD	PY5U8EY8	Premium
ALV-10050T3-DBUNVD	P8OXN4QJ	Premium
ALV-10050T4-DBUNVD	PKT9QQRL	Premium
ALV-10050T5-DBUNVD	P45XI6C7	Premium
ALV-10050T5-DBUNVD / ALV-10050T5-DBHVLD	P45XI6C7 / S-GUZECM	Premium
ALV-15040T2-DBUNVD / ALV-15040T2-DBHVLD	P6OO209I / S-5WI7EJ	Premium
ALV-15040T3-DBUVD / ALV-15040T3-DBHVLD	P9QQ1Q6C / S-I6YXFU	Premium
ALV-15040T5-DBUNVD / ALV-15040T5-DBHVLD	P97JQ1EL / S-JDY87A	Premium
ALV-15050T2-DBUNVD/ ALV-15050T2-DBHVLD	P1529YH5 / S-OQ6DF5	Premium
ALV-15050T3-DBUNVD / ALV-15050T3-DBHVLD	PZJ39IJ6 / S-Q8CBEU	Premium
ALV-15040T4-DBUNVD / ALV-15040T4-DBHVLD	PWYRN8FM / S-8ATGW4	Premium
ALV-15050T4-DBUNVD / ALV-15050T4-DBHVLD	P17SOYDR / S-NTWAZ9	Premium
ALV-15040T5-DBUNVD / ALV-15040T5-DBHVLD	P97Q1EL / S-GUZECM	Premium
ALV-15050T5-DBUNVD / ALV-15050T5-DBHVLD	PXBH3N5S / S-GUZECM	Premium
ALV-20030T2-DBUNVD	S-D6V1GJ	Premium
ALV-20030T3-DBUNVD	S-R4Z4MV	Premium
ALV-20030T4-DBUNVD	S-C4MR46	Premium
ALV-20030T5-DBUNVD	S-C9V7S7	Premium
ALV-20040T2-DBUNVD	S-LZKW5D	Premium
ALV-20040T3-DBUNVD	S-P4FS3N	Premium
ALV-20040T4-DBUNVD	S-F0W1H9	Premium
ALV-20040T5-DBUNVD	S-1FHD6N	Premium
ALV-20050T2-DBUNVD	S-9NXVVM	Premium
ALV-20050T3-DBUNVD	S-9JYCMM	Premium
ALV-20050T4-DBUNVD	S-YHYXX7	Premium
ALV-20050T5-DBUNVD	S-FDHC65	Premium
ALV-32040T2-DBUNVD / ALV-32040T2-DBHVLD	PZEOMF5Q / S-HCAJDI	Premium
ALV-32050T2-DBUNVD / ALV-32050T2-DBHVLD	P8Q8SFWY / S-IKVNBJ	Premium
ALV-32040T3-DBUNVD / ALV-32040T3-DBHVLD	PFTH94VH / S-IOHE49	Premium
ALV-32050T3-DBUNVD / ALV-32050T3-DBHVLD	PB6OTIAO / S-DH7R6T	Premium
ALV-32040T4-DBUNVD / ALV-32040T4-DBHVLD	PSXNOMAV / S-XM96N7	Premium
ALV-32050T4-DBUNVD / ALV-32050T4-DBHVLD	P8NSAN18 / S-JGLKPI	Premium
ALV-32040T5-DBUNVD / ALV-32040T5-DBHVLD	PLW2VQJ3 / S-U5ODSH	Premium
ALV-32050T5-DBUNVD / ALV-32050T5-DBHVLD	PITR7WC5 / S-H5T81G	Premium

Advantage Lighting Solutions® - All Rights Reserved

WALL MOUNT SPEC

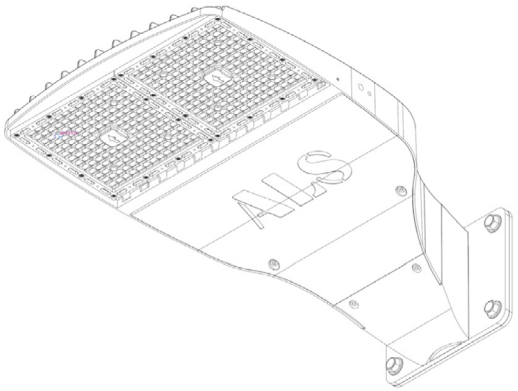

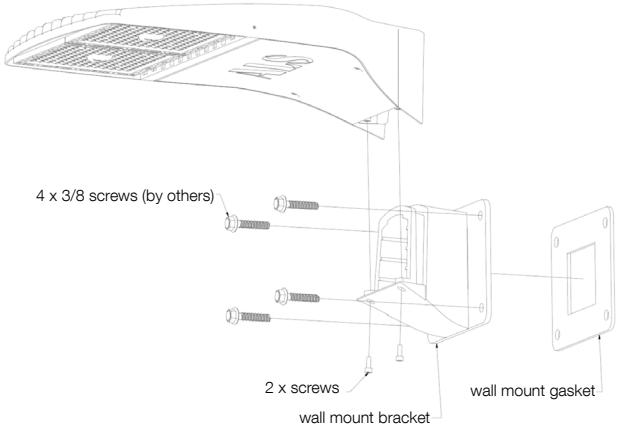

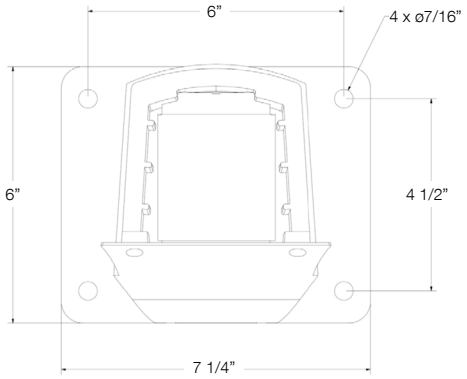

SHIELD SPEC

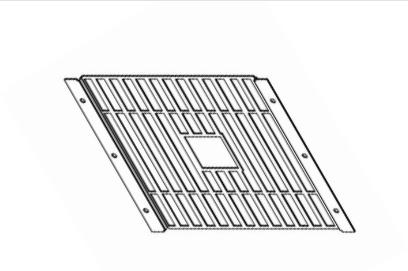

Backlight Control (Installed on Lens)
Standard Housing: 2:1
Hi-Lumen Housing: 4:1

Backlight Shield (Installed on Housing)

SHIELD-ALV-150: Standard Housing: 1:1
SHIELD-ALV-450: Hi-Lumen Housing: 1:1

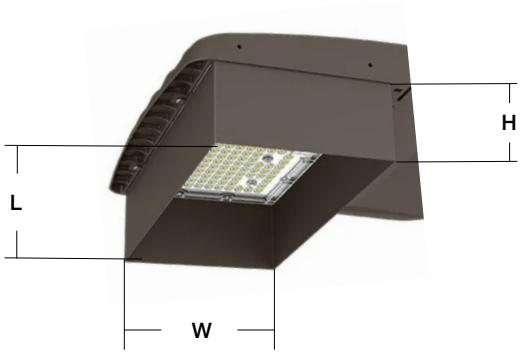

4-Side Metal Visor (Installed on Housing)

VISOR-ALV-150: Standard Housing: 1:1
L: 12.75” x W: 7.25” x H: 4.75”

VISOR-ALV-450: Hi-Lumen Housing: 1:1
L: 13” x W: 12.82” x H: 6”

SENSOR SPEC

Model	Type	Mounting	Coverage	Input	Function	Programmable
SENSOR-823	PIR	**L3** - 40FT **L4** - 8FT	30FT radius 24FT radius	Universal	On/Off/Dimming	REMOTE-RC100
SENSOR-820	PIR	up to 40FT	30FT radius	100 ~ 480V	On/Off/Dimming Daylight Harvesting	REMOTE-RC100
SENSOR-DC-PIR (see page 15 for detail)	PIR	8FT ~ 40FT	45FT radius	AVI-ON Sensor Interface	Bluetooth Mesh Daylight Harvesting Motion	AVI-ON Bluetooth Mobile App
SENSOR-PH-PB-U	-	-	-	Universal	Dusk-to-Dawn Control	-
SENSOR-PH-PT-U SENSOR-PH-PT-UD SENSOR-PH-PT-HD	-	-	-	Universal 277 ~ 480V	Dusk-to-Dawn Control	-
CONTROL-LVFA (see page 14 for detail)	Fixture Controller	-	-	12V DC	Bluetooth Mesh On/Off/Dimming Scheduling	AVI-ON Bluetooth Mobile App
SENSOR-BLE-619 (see page 16 for detail)	PIR	**L3** - 40FT **L4** - 8FT	30FT radius 24FT radius	12V DC	Bluetooth Mesh On/Off Daylight	ALS Control Bluetooth Mobile App
CONTROL-BLE-SK104-PH (see page 17 for detail)	Fixture Controller	-	-	12V DC	Bluetooth Mesh On/Off/Dimming Scheduling CCT Tuning	ALS Control Bluetooth Mobile Control

SENSOR-823

SENSOR-820

SENSOR-PH-PB-U

SENSOR-PH-PT-U/H

CONTROL-LVFA

SENSOR-BLE-619

CONTROL-BLE
-SK104-PH

EMB SPEC

Model	Battery Capacity	Input	Output	Output Power	Operating Temp	Installation
EMB-8W-B	90mins	100-347VAC	170VDC	8w	0°C ~ 50°C 32°F ~ 122°F	Factory or Field Install
EMB-18W-B	90mins	100-347VAC	170VDC	18w	0°C ~ 50°C 32°F ~ 122°F	Factory or Field Install
EMB-18W-C-B	90mins	100-347VAC	170VDC	18w	-20C ~ 50C -4°F ~ 122°F	Factory or Field Install

Advantage Lighting Solutions® - All Rights Reserved

CONTROL-LVFA SPEC

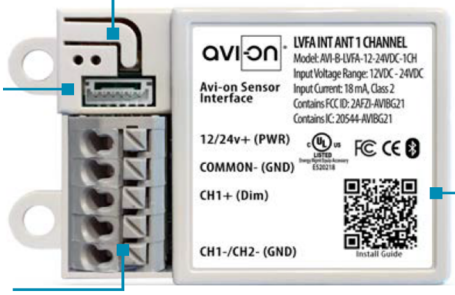

Status LEDs & Config Button
Quick and easy validation of wiring and network

Direct Connect™ Sensor Port
Simple and cost-effective addition to Avi-on sensors

Terminal Blocks & Mounting Tabs
Faster, easier and lower cost installation eliminating connectors

Internal Antenna
Improved performance and eliminates risk of accidentally cutting a hanging wire

SPECIFICATIONS

INPUT VOLTAGE:	12-24VDC
CURRENT:	15mA without a Sensor 19mA with a DC PIR Sensor 48mA with a DC Microwave Sensor
0-10V DIMMING:	12-24VDC
SIZE:	2.30in x 1.43in x 0.75in (58.2mm x 36.4mm x 19mm)
MOUNTING:	Removable mounting tabs
WEIGHT:	0.45 oz (16g)
OPERATING TEMP:	-22°F to +158°F (-30°C to + 70°C)

RADIO FREQUENCY:	2.4GHz
WIRELESS STANDARD:	BLE 4.2 with Mesh
POINT TO POINT RANGE*:	80ft with obstructions 350ft unobstructed
SECURITY:	AES 128-bit encryption for device to device communication AES 256-bit encryption for device to cloud communication
WARRANTY:	5 years; 10 years optional
REGULATORY:	FCC: 2AFZI-AVI1010 B IC: 20544-AVI1010 B BQB: D031801, DID: 86303 UL 916, 2043 (Plenum Rated)

*When communicating through the mesh, range is essentially unlimited (5000ft+)

WIRING DIAGRAM

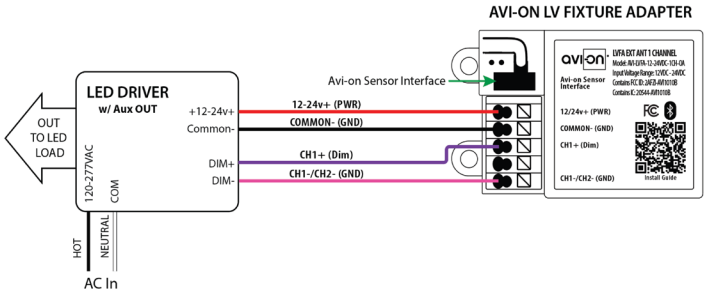

Fixture adapter powered by LED driver auxiliary output

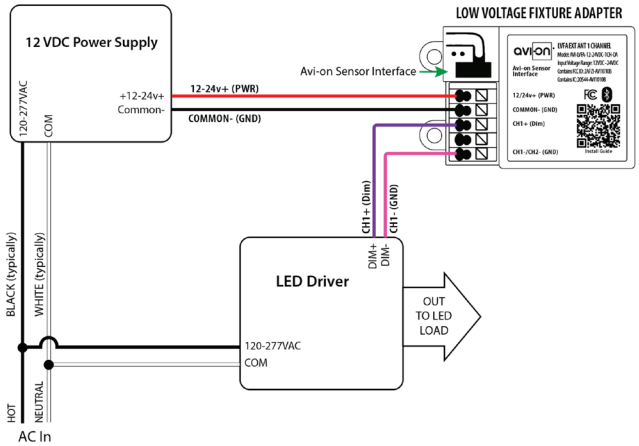

Fixture adapter connected to LED driver and using power supply

SENSOR-DC-PIR SPEC

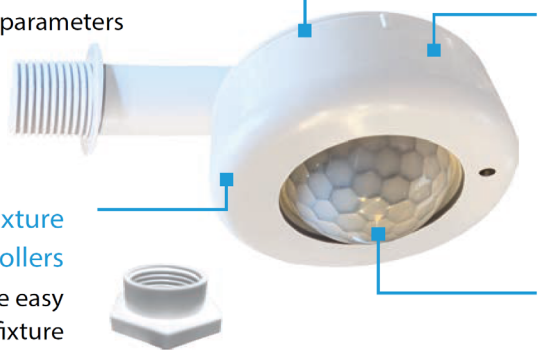

Bi Level PIR Motion & Daylighting Sensor

Fully Adjustable parameters

Easy Connect to Avi-on Fixture & Zone Controllers

3ft and 10ft cable options are easy to install inside or outside fixture

Flexible Mounting Options

- In-fixture
- Ceiling Mount
- Side Mount
- Junction Mount
- IP 67 for Watertight Applications
- UL Indoor Rated

High Resolution Lens & Sensor

A Single product suited for 8′ to 40′ mounting heights, indoor and outdoor, warehouse and office

SPECIFICATIONS

INPUT VOLTAGE:	AVI-ON Direct Connect Low Voltage DC Sensor Port
SIZE:	2.30in x 1.43in x 0.75in (58.2mm x 36.4mm x 19mm)
MOUNTING:	8FT - 40 FT **PIR Head (Ceiling or Fixture)**: 1/2in (18mm) Threaded insert size: 0.80in (20.5mm) x 0.4in (10mm) tall. **Elbow:** Connector thread size: 0.80in (20.5mm) x 0.79in (20mm).
WEIGHT:	1.4oz (40g)

OPERATING TEMP:	-22°F to +158°F (-30°C to +70°C)
STORAGE TEMP:	-40°F to +185°F (-40°C to +85°C)
OPERATING MODES:	Occupancy, Vacancy, UV-C safety, B-Level, dim-to-specified level (never off), schedule driven, control zones
STATUS LED:	Motion Detection
DAYLIGHT HARVESTING:	Open or closed loop
DAYLIGHTING RANGE:	360° X 90°
WARRANTY:	5 years; 10 years optional
REGULATORY:	UL 916 IP 67 - Sensor Head IP 66 - With Elbow Head

*Note: Operating controller at or above these levels may result in damage to components/product

WIRING DIAGRAM

MOUNTING DIAGRAM

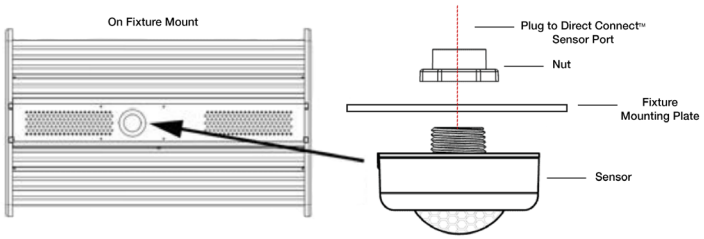

ALS CONTROL

SENSOR-BLE-619 BLUETOOTH PIR SENSOR

Client:
Project:
Type:
Quantity:

FEATURE

- **Installation:** Factory Install - Sensor integral to fixture, lens external
- **Commissioning:** Wirelessly through ALS Control Mobile App (iOS / Android)
- **Certification:** DLC 5.1 Networked Lighting Control System
- **Control:** Hold time, High-Low setting, continuous Bi-level dimming, manual/auto - on/off
- **Sensor:** Motion (Occupancy/Vacancy/Manual) and Daylight
- **Zone Control:** Zoning and Grouping control, Scheduling

SPECIFICATIONS

SENSOR TYPE:	Passive Infrared Sensor (PIR)	**COMMISSIONING RANGE:**	50FT
WIRELESS STANDARDS:	Bluetooth SIG Mesh	**BLUETOOTH RANGE:**	Integral antenna up to 100FT
INPUT VOLTAGE:	12-24VDC, >50mA	**DETECTION ANGLE:**	Vertical 90° x Horizontal 360°
CONTROL OUTPUT:	0-10V	**MOUNTING HEIGHT:**	8 - 40FT
OPERATING TEMP:	-40°F ~ +158°F (-40°C ~ +70°C)	**WARRANTY:**	5 years
		IP RATING:	IP65

DIMENSIONS

BOTTOM VIEW

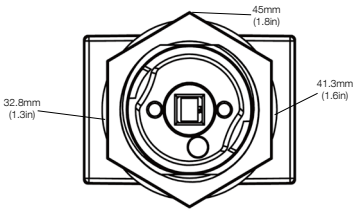

SIDE VIEW

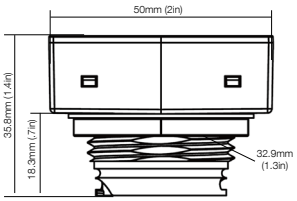

SIDE VIEW WITH DIPSWITCH

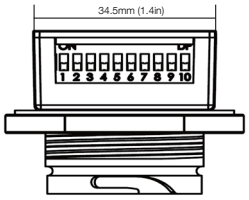

COVERAGE PATTERNS

SIDE VIEW (in feet)

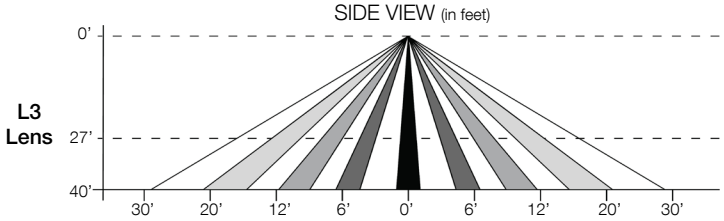

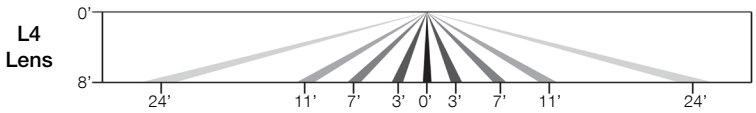

TOP VIEW (in feet)

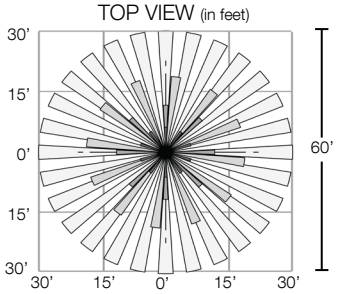

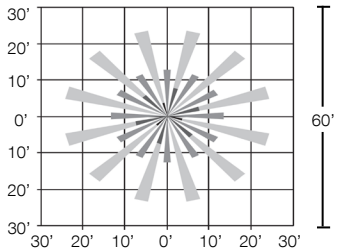

ORDER CODE — EXAMPLE: SENSOR-BLE-619-L3

A SERIES

SENSOR-BLE-619-L Integral PIR ALS Control Bluetooth Sensor 12VDC Input

B LENS

Code	Mounting	Coverage
☐ 3	40FT	30FT Radius
☐ 4	8FT	24FT Radius

ALS CONTROL

CONTROL-BLE-SK104-PH BLUETOOTH CONTROLER

Client:
Project:
Type:
Quantity:

FEATURE

- **Installation:** Factory / Jobsite install through 1/2” knockout hole, 12V AUX power required
- **Commissioning:** Wirelessly through ALS Control Mobile App (iOS / Android)
- **Certification:** DLC 5.1 Networked Lighting Control System
- **Control:** High-End Trim, Zoning, Continuous Bi-level Dimming
- **CCT Tuning:** CCT Tuning feature for Dual/Multi-CCT LED board fixture only
- **Sensor:** Photocell
- **Zone Control:** Zoning and Grouping control, Scheduling

SPECIFICATIONS

SENSOR TYPE:	Photocell
WIRELESS STANDARDS:	5.0 Bluetooth Mesh
INPUT VOLTAGE:	12-14VDC, >50mA
CONTROL OUTPUT:	0-10V
OPERATING TEMP:	-40°F ~ +158°F (-40°C ~ +70°C)
COMMISSIONING RANGE:	50FT
BLUETOOTH RANGE:	100FT
DETECTION ANGLE:	360°
WARRANTY:	5 years
IP RATING:	IP65

DIMENSIONS

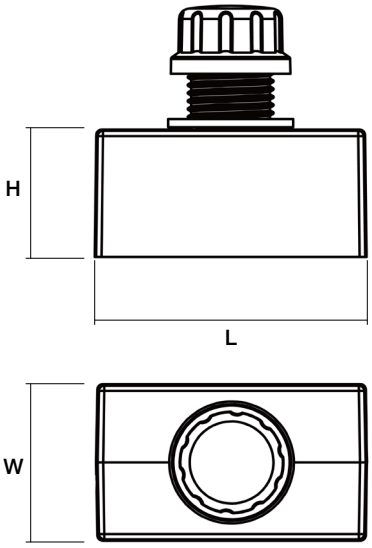

L	H	W
1.14” (29mm)	0.94” (24mm)	1.97” (50mm)
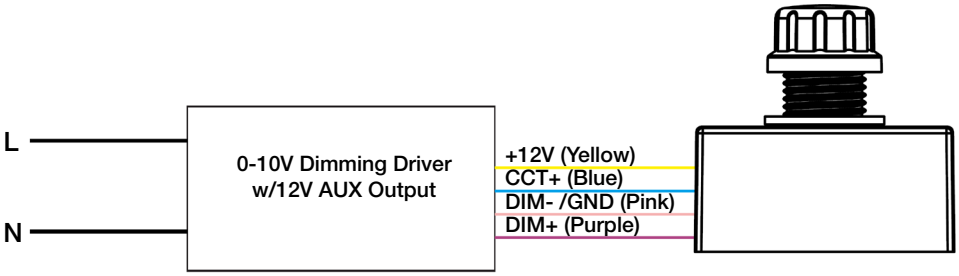
WIRING DIAGRAM