Client:
Project:
Type:
Quantity:

VT SERIES VAPOR TIGHT LINEAR

CONSTRUCTION
Die-cast aluminum compact design with semi-gloss White finish. 3/4" knockout made on each end of driver enclosure for sensor, through wiring or surface conduit mount.

OPTICS
End-to-end diffused polycarbonate (PC) lens.

ELECTRICAL
Delivered average 120lm/W efficacy LEDs offer 80+ color rendering index (CRI), L70 >56,000 hours expected life.
-40°C up to 45°C (-40°F up to 113°F) maximum operating temperature.
Driver operates at 120-277V input, 0-10V dimmable driver, down to 10%.

MOUNTING
Designed for direct wire or as a portable luminaire with use of power cord.*
Standard surface mountable underneath electrical box, or surface conduit mount through 3/4" knockout.
Optional VT hooks for chain mount.

SENSORS (OPTIONAL)
SENSOR-819W-O1 End mount on/off motion sensor lowbay lens (Wet).
SENSOR-819W-D1 End mount programmable motion and photocell sensor lowbay lens (Wet).
SENSOR-BLE-819W-L1 End mount ALS CONTROL bluetooth on/off motion sensor lowbay lens (Wet).
CONTROL-LVFA AVI-ON Bluetooth Mesh Controller.
SENSOR-PH-PB-U Integral Button Style Photocell.

SHIPPING DATA

Product	Measurement	Weight
VT-95	24"L x 7"W x 4"H	9 lb

STANDARD FINISH
Corrosion resistant semi-gloss White finish, IP66 for wet location.

CERTIFICATION
IP66 Wet location label standard.
Meets Buy America Act requirements.
All luminaires are built to UL1598 standards and bear appropriate cULus labels.
For Emergency application, equipment with UL924 certified battery packs.
DLC® Premium (DesignLights Consortium Qualified)

WARRANTY
5 year warranty, see Limited Warranty for additional information.

VT SERIES VAPOR TIGHT LINEAR

ORDER INFORMATION

EXAMPLE: VT 45 50 WH UD

Fixture	Series	Power & LM	CCT	Finish	Input
	VT			WH	UD

Accessories Options			

A SERIES

VT	Vapor Tight Linear

B POWER & LM

Code	Size	Power	LM
95	2-Foot	95W	11600lm

C CCT

40	4000K
50	5000K

D FINISH

WH	White

E INPUT

UD	110-277V, 0-10V Dimmable (Standard)
HD	347-480V, 0-10V Dimmable

F ACCESSORIES/OPTIONS

BAA	Assembled in America, compliant with BAA (COTS)
REMOTE-RC100	Handheld Remote Commissioning Tool for SENSOR-819-D1/D2 Only
MOUNT-VT-HOOK	V Hook Mount - chain provided by others
EMB-8W-B**	90-Minute Self-Diagnostic Emergency Battery 8W 100-347VAC Input 170VDC Output
SENSOR-819W-O1*	End mount on/off motion sensor lowbay lens (Wet)
SENSOR-819W-D1*	End mount on/off/dimming and photocell sensor lowbay lens (Wet)
SENSOR-BLE-819W-L1*	End Mount PIR Bluetooth Daylight Harvesting Sensor (ALS Control Mobile App) / **L1:** up to 20FT (Wet)
SENSOR-PH-PB-U*	Button Style Photocell
CONTROL-LVFA*	AVI-ON Bluetooth Mesh Control System
SURGE-LSP4-U / H	10kV inline Surge Protection for Universal input / **U:** 120-277V, **H:** 480V input
-PLUG	18-3 300V 6 Foot and 3 Prong Plug
-CORD	18-3 300V 6 Foot Cord
TWIST-LOCK	Specify Plug Type: **L515P** / **L715P** / **HBL5929** / **L8-20P**

*see page 4 for sensor spec

**see page 5 for emb spec

VT SERIES VAPOR TIGHT LINEAR

DIMENSIONS

Model	L	W	H
VT-95	23.60” (600mm)	6.80” (173.7mm)	3.70” (93mm)

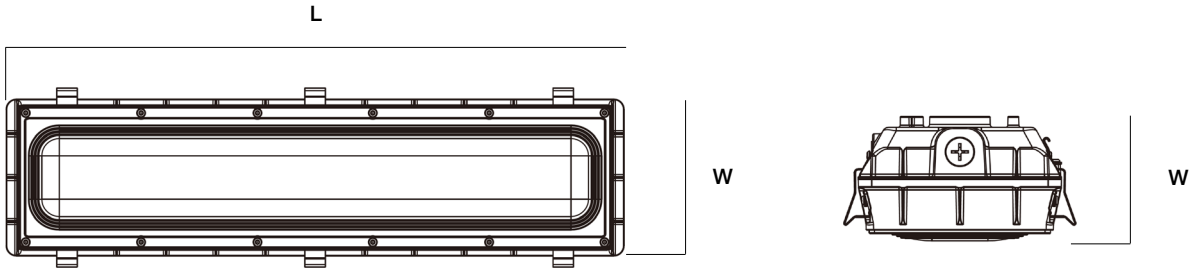

VT SERIES VAPOR TIGHT LINEAR

PERFORMANCE DATA

SYSTEM WATTS	CCT	VOLTAGE	LUMEN	LPW	QTY ON PALLET	DLC PRODUCT ID / ORDER CODE	DLC CLASS
95W	4000K	120-277V	11400	120	72	MVT0395W27V40K[W,D,B][Blank,M][Blank,B]PG[Blank,0-9,A-Z,a-z] Product ID: P14S0IUY	DLC 5.1 Premium
	5000K	120-277V	11600	122	72	MVT0395W27V50K[W,D,B][Blank,M][Blank,B]PG[Blank,0-9,A-Z,a-z] Product ID: PQJKP0D2	DLC 5.1 Premium

SENSOR SPEC

Model	Type	Mounting	Coverage	Input	Function	Programmable
SENSOR-819W-O1	PIR	20FT	30FT radius	Universal	On/Off	-
SENSOR-819W-D1	PIR	20FT	30FT radius	Universal	On/Off/Dimming	REMOTE-RC100
SENSOR-BLE-819W (see page 7 for detail)	PIR	**L1** - 20FT	30FT radius	Universal	Bluetooth Mesh On/Off/Dimming Daylight Harvesting	ALS Control Bluetooth Mobile App
CONTROL-LVFA (see page 6 for detail)	Fixture Controller	-	-	12V DC	Bluetooth Mesh On/Off/Dimming Scheduling	AVI-ON Bluetooth Mobile App
SENSOR-PH-PB-U	-	-	-	Universal	Dusk-to-Dawn Control	-

SENSOR-819W-XX
SENSOR-BLE-819W

CONTROL-LVFA

SENSOR-PH-PB-U

EMB SPEC

Model	Battery Capacity	Input	Output	Output Power	Operating Temp	Installation
EMB-8W-B	90mins	100-347VAC	170VDC	8W	0°C ~ 50°C 32°F ~ 122°F	Field or Factory Install

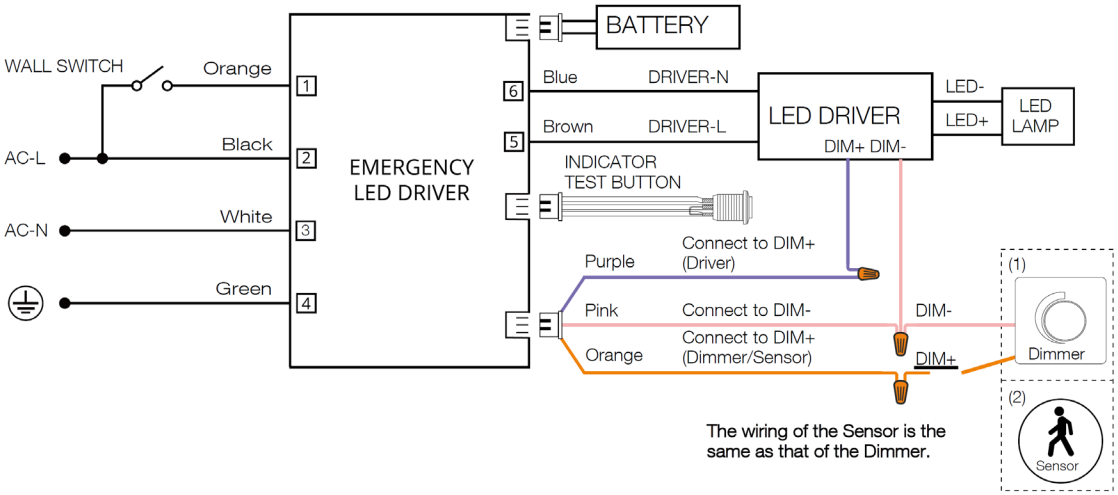

CONTROL-LVFA SPEC

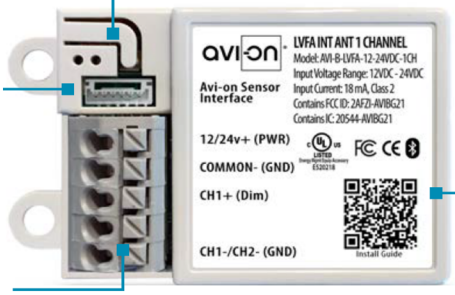

Status LEDs & Config Button
Quick and easy validation of wiring and network

Direct Connect™ Sensor Port
Simple and cost-effective addition to Avi-on sensors

Terminal Blocks & Mounting Tabs
Faster, easier and lower cost installation eliminating connectors

Internal Antenna
Improved performance and eliminates risk of accidentally cutting a hanging wire

SPECIFICATIONS

INPUT VOLTAGE:	12-24VDC
CURRENT:	15mA without a Sensor 19mA with a DC PIR Sensor 48mA with a DC Microwave Sensor
0-10V DIMMING:	12-24VDC
SIZE:	2.30in x 1.43in x 0.75in (58.2mm x 36.4mm x 19mm)
MOUNTING:	Removable mounting tabs
WEIGHT:	0.45 oz (16g)
OPERATING TEMP:	-22°F to +158°F (-30°C to + 70°C)

RADIO FREQUENCY:	2.4GHz
WIRELESS STANDARD:	BLE 4.2 with Mesh
POINT TO POINT RANGE*:	80ft with obstructions 350ft unobstructed
SECURITY:	AES 128-bit encryption for device to device communication AES 256-bit encryption for device to cloud communication
WARRANTY:	5 years; 10 years optional
REGULATORY:	FCC: 2AFZI-AVI1010 B IC: 20544-AVI1010 B BQB: D031801, DID: 86303 UL 916, 2043 (Plenum Rated)

*When communicating through the mesh, range is essentially unlimited (5000ft+)

WIRING DIAGRAM

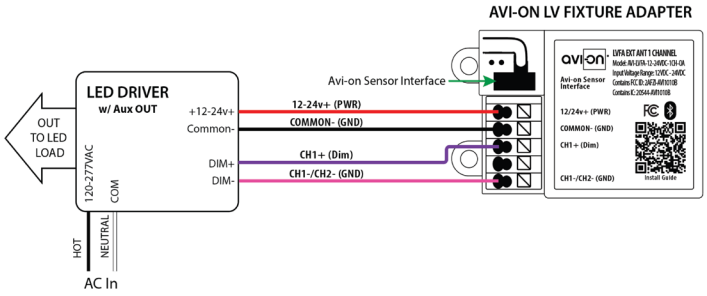

Fixture adapter powered by LED driver auxiliary output

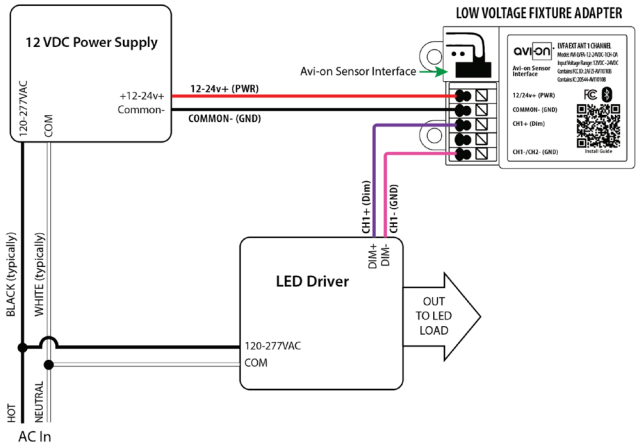

Fixture adapter connected to LED driver and using power supply

ALS CONTROL

SENSOR-BLE-819W BLUETOOTH PIR SENSOR

Client:
Project:
Type:
Quantity:

FEATURE

- **Installation:** Factory or Field Install End Mount to Fixture
- **Commissioning:** Wirelessly through ALS Control Mobile App (iOS / Android)
- **Certification:** DLC 5.1 Networked Lighting Control System
- **Control:** Hold time, High-Low setting, continuous Bi-level dimming, Code-compliant manual-on or auto-off capability
- **Sensor:** Motion (Occupancy/Vacancy/Manual) and Daylight Harvesting
- **Room and Zone Control:** Zoning and Grouping control, Scheduling

SPECIFICATIONS

SENSOR TYPE:	Passive Infrared Sensor (PIR)
WIRELESS STANDARDS:	Bluetooth SIG Mesh
INPUT VOLTAGE:	120/277VAC
CONTROL OUTPUT:	0-10V
OPERATING TEMP:	-40°F ~ +167°F (-40°C ~ +75°C)
COMMISSIONING RANGE:	50FT
BLUETOOTH RANGE:	Intergral antenna up to 100FT
DETECTION ANGLE:	Vertical 90° x Horizontal 360°
MOUNTING HEIGHT:	8 - 40FT
WARRANTY:	5 years
IP RATING:	IP65 Wet

DIMENSIONS

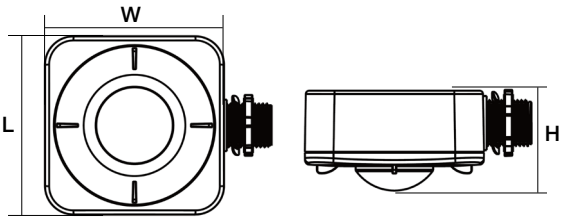

L	W	H
3.19” (81mm)	4.02” (102mm)	1.70” (43.3mm)
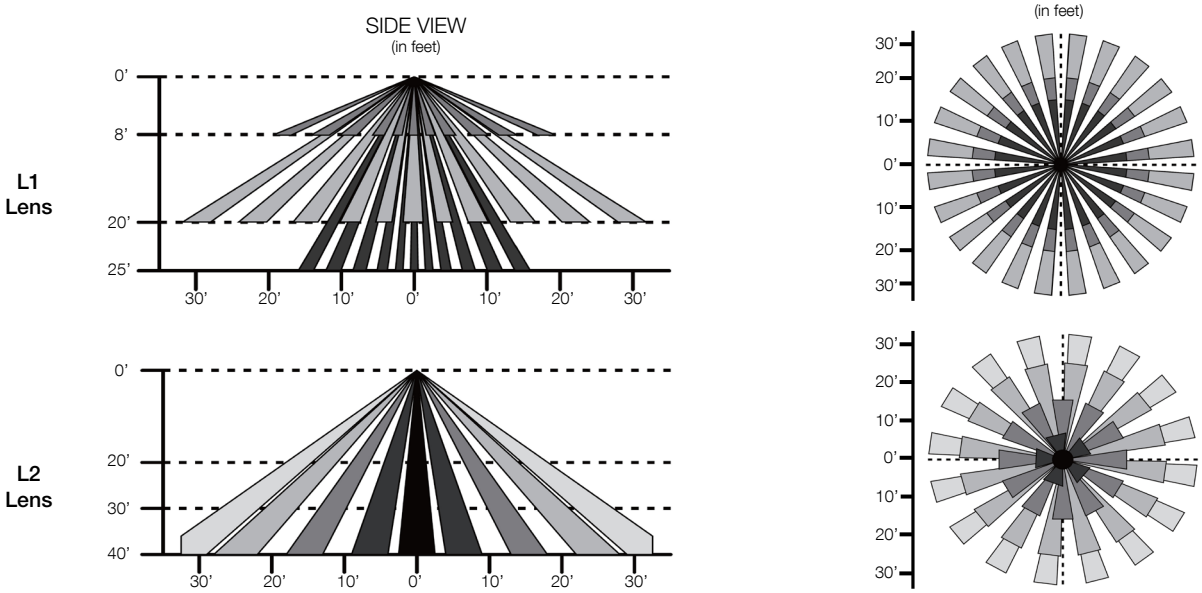
COVERAGE PATTERNS