Client:
Project:
Type:
Quantity:

VTA G2 SERIES VAPOR TIGHT LINEAR

CONSTRUCTION

Polycarbonate material housing, compact design with stainless steel latches. 3/4" knockout back and end of housing for end mount sensor, through wiring or surface conduit mount.

OPTICS

Frosted polycarbonate lens offers edge to edge smooth illumination for maximum visual comfort.

ELECTRICAL

Delivered average 135lm/W efficacy LEDs offer 80+ color rendering index (CRI).
Field Selectable Output and CCT (see ordering information for detail).
L70 >100,000 hours expected life.
-40°C up to 50°C (-40°F up to 122°F) maximum operating temperature.
Driver operates at 120-277V input, 0-10V dimmable driver, down to 10%.

MOUNTING

Designed for direct wire or as a portable luminaire with use of power cord.*
Standard surface mountable underneath electrical box, or surface conduit mount through 3/4" knockout.
*Power-cord - optional add-on.

SENSORS (OPTIONAL)

SENSOR-819W-O1 End mount on/off motion sensor highbay lens (Wet).
SENSOR-819W-D1 End mount programmable motion and photocell sensor highbay lens (Wet).
SENSOR-BLE-819W-L1 End mount ALS CONTROL bluetooth on/off motion sensor lowbay lens (Wet).
CONTROL-LVFA AVI-ON Bluetooth Mesh Controller.
SENSOR-PH-PB-U Integral Button Style Photocell.

STANDARD FINISH

Semi-gloss White finish standard, IP66 for wet location.

CERTIFICATION

IP66 Wet location label standard.
Meets Buy America Act requirements.
All luminaires are built to UL1598 standards and bear appropriate cULus labels.
For Emergency application, equipment with UL924 certified battery packs.
DLC® Premium (DesignLights Consortium Qualified).

WARRANTY

5 year warranty, see Limited Warranty for additional information.

VTA G2 SERIES VAPOR TIGHT LINEAR

ORDER INFORMATION

EXAMPLE: VTA 65 G2 SC WH UD

Fixture	Series	Power & LM	CCT	Finish	Input
	VTA		SC	WH	UD
Accessories Options					

A SERIES

VTA	Vapor Tight Linear Field Selectable Output & CCT

B POWER & LM

Code	Size	Power	LM
65-G2	4-Foot	Field Selectable 45W / 52W / 65W	6033 / 6950 / 8401lm

C CCT

SC	Field Selectable 3500K / 4000K / 5000K

D FINISH

WH	White

E INPUT

UD	110-277V, 0-10V Dimmable

F ACCESSORIES/OPTIONS

BAA	Assembled in America, Compliant with BAA (COTS)
MOUNT-VT-HOOK	V Hook Mount - Chain Provided by Others
EMB-8W-B*	90-Minute Self-Diagnostic Emergency Battery 8W 100-347VAC Input 170VDC Output
EMB-18W-B	90-Minute Self-Diagnostic Emergency Battery 18W 100-347VAC Input 170VDC Output
EMB-18W-C-B	90-Minute Self-Diagnostic Emergency Battery 18W 100-347VAC Input 170VDC Output -20°C-50°C (-4°F-122°F)
REMOTE-RC100	Handheld Remote Commissioning Tool for SENSOR-819-D1/D2 Only
SENSOR-819W-O1*	End mount on/off motion sensor lowbay lens (Wet)
SENSOR-819W-D1*	End mount on/off/dimming and photocell sensor lowbay lens (Wet)
SENSOR-BLE-819W-L1*	End Mount PIR Bluetooth Daylight Harvesting Sensor (ALS Control Mobile App) / **L1:** up to 20FT (Wet)
SENSOR-PH-PB-U*	Button Style Photocell
CONTROL-LVFA*	AVI-ON Bluetooth Mesh Control System
SURGE-LSP4-U	10kV Surge Protector
-PLUG	6-Foot Black Cord and Plug (3-Prong)
-CORD	18-3 300V 6 Foot Cord
TWIST-LOCK	Specify Plug Type: **L515P** / **L715P** / **HBL5929** / **L8-20P**

*see page 4 for sensor spec

**see page 5 for emb spec

VTA G2 SERIES VAPOR TIGHT LINEAR

DIMENSIONS

Model	L	W	H
VTA-G2-65	47.20” (1200mm)	3.80” (96mm)	3.10” (79mm)

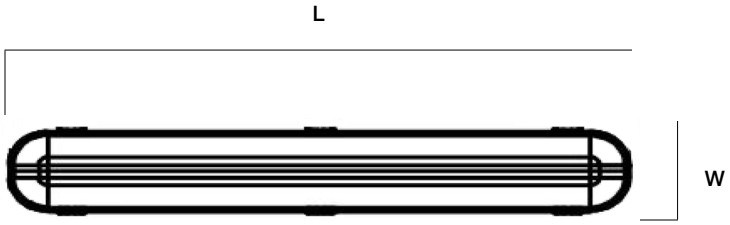

PERFORMANCE DATA

SYSTEM WATTS	VOLTAGE	3500K		4000K		5000K	
		LUMENS	LPW	LUMENS	LPW	LUMENS	LPW
45W	120-277V	5,891	135	5,950	142	6,033	136
52W	120-277V	6,787	134	6,855	140	6,950	135
65W	120-277V	8,205	130	8,287	137	8,401	132

Advantage Lighting Solutions® - All Rights Reserved

VTA G2 SERIES VAPOR TIGHT LINEAR

SENSOR SPEC

Model	Type	Mounting	Coverage	Input	Function	Programmable
SENSOR-819W-O2	PIR	40FT	30FT radius	Universal	On/Off	-
SENSOR-819W-D2	PIR	40FT	30FT radius	Universal	On/Off/Dimming	REMOTE-RC100
SENSOR-BLE-819W (see page 7 for detail)	PIR	**L1** - 20FT	30FT radius	Universal	Bluetooth Mesh On/Off/Dimming Daylight Harvesting	ALS Control Bluetooth Mobile App
CONTROL-LVFA (see page 6 for detail)	Fixture Controller	-	-	12V DC	Bluetooth Mesh On/Off/Dimming Scheduling	AVI-ON Bluetooth Mobile App
SENSOR-PH-PB-U	-	-	-	Universal	Dusk-to-Dawn Control	-

SENSOR-819W-XX
SENSOR-BLE-819W

CONTROL-LVFA

SENSOR-PH-PB-U

VTA G2 SERIES VAPOR TIGHT LINEAR

EMB SPEC

Model	Battery Capacity	Input	Output	Output Power	Operating Temp	Installation
EMB-8W-B	90mins	100-347VAC	170VDC	8W	0°C ~ 50°C 32°F ~ 122°F	Factory or Field Install
EMB-18W-B	90mins	100-347VAC	170VDC	18w	0°C ~ 50°C 32°F ~ 122°F	Factory or Field Install
EMB-18W-C-B	90mins	100-347VAC	170VDC	18w	-20°C ~ 50°C -4°F ~ 122°F	Factory or Field Install

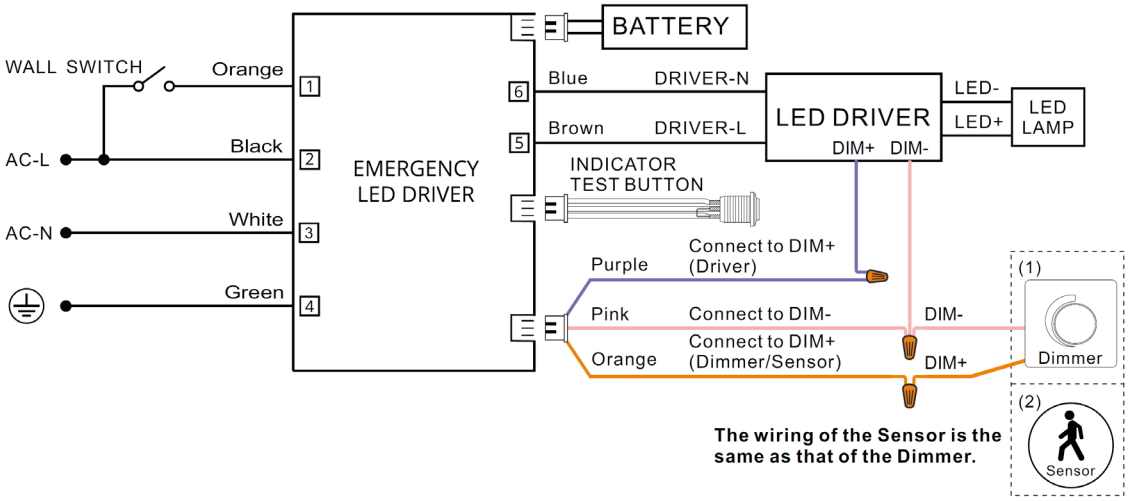

CONTROL-LVFA SPEC

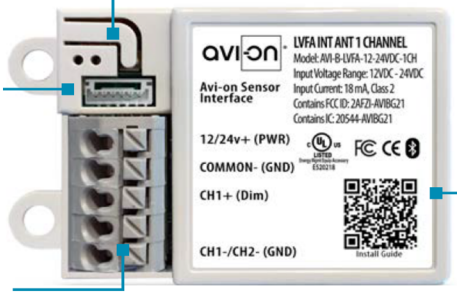

Status LEDs & Config Button
Quick and easy validation of wiring and network

Direct Connect™ Sensor Port
Simple and cost-effective addition to Avi-on sensors

Terminal Blocks & Mounting Tabs
Faster, easier and lower cost installation eliminating connectors

Internal Antenna
Improved performance and eliminates risk of accidentally cutting a hanging wire

SPECIFICATIONS

INPUT VOLTAGE:	12-24VDC
CURRENT:	15mA without a Sensor 19mA with a DC PIR Sensor 48mA with a DC Microwave Sensor
0-10V DIMMING:	12-24VDC
SIZE:	2.30in x 1.43in x 0.75in (58.2mm x 36.4mm x 19mm)
MOUNTING:	Removable mounting tabs
WEIGHT:	0.45 oz (16g)
OPERATING TEMP:	-22°F to +158°F (-30°C to + 70°C)

RADIO FREQUENCY:	2.4GHz
WIRELESS STANDARD:	BLE 4.2 with Mesh
POINT TO POINT RANGE*:	80ft with obstructions 350ft unobstructed
SECURITY:	AES 128-bit encryption for device to device communication AES 256-bit encryption for device to cloud communication
WARRANTY:	5 years; 10 years optional
REGULATORY:	FCC: 2AFZI-AVI1010 B IC: 20544-AVI1010 B BQB: D031801, DID: 86303 UL 916, 2043 (Plenum Rated)

*When communicating through the mesh, range is essentially unlimited (5000ft+)

WIRING DIAGRAM

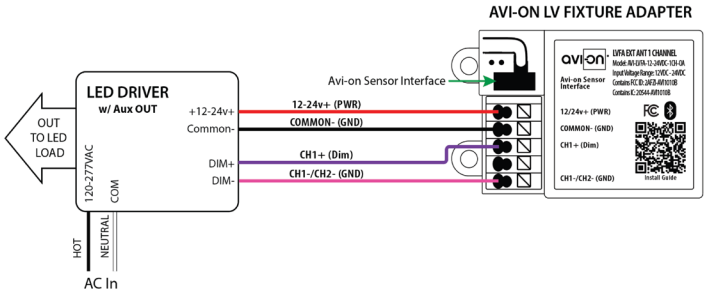

Fixture adapter powered by LED driver auxiliary output

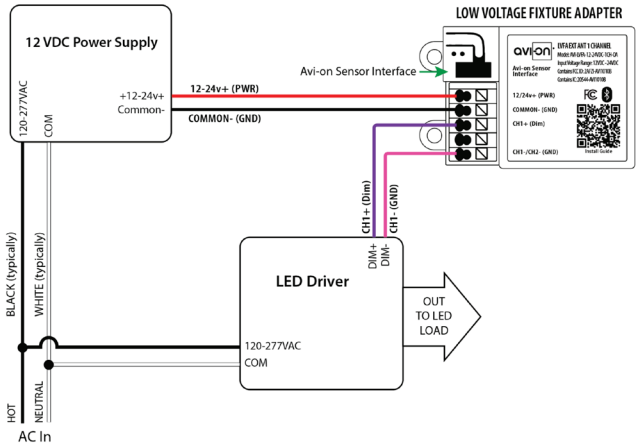

Fixture adapter connected to LED driver and using power supply

ALS CONTROL

SENSOR-BLE-819W BLUETOOTH PIR SENSOR

Client:
Project:
Type:
Quantity:

FEATURE

- **Installation:** Factory or Field Install End Mount to Fixture
- **Commissioning:** Wirelessly through ALS Control Mobile App (iOS / Android)
- **Certification:** DLC 5.1 Networked Lighting Control System
- **Control:** Hold time, High-Low setting, continuous Bi-level dimming, Code-compliant manual-on or auto-off capability
- **Sensor:** Motion (Occupancy/Vacancy/Manual) and Daylight Harvesting
- **Room and Zone Control:** Zoning and Grouping control, Scheduling

SPECIFICATIONS

SENSOR TYPE:	Passive Infrared Sensor (PIR)
WIRELESS STANDARDS:	Bluetooth SIG Mesh
INPUT VOLTAGE:	120/277VAC
CONTROL OUTPUT:	0-10V
OPERATING TEMP:	-40°F ~ +167°F (-40°C ~ +75°C)
COMMISSIONING RANGE:	50FT
BLUETOOTH RANGE:	Intergral antenna up to 100FT
DETECTION ANGLE:	Vertical 90° x Horizontal 360°
MOUNTING HEIGHT:	8 - 40FT
WARRANTY:	5 years
IP RATING:	IP65 Wet

DIMENSIONS

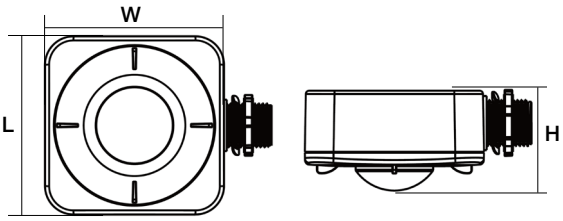

L	W	H
3.19” (81mm)	4.02” (102mm)	1.70” (43.3mm)
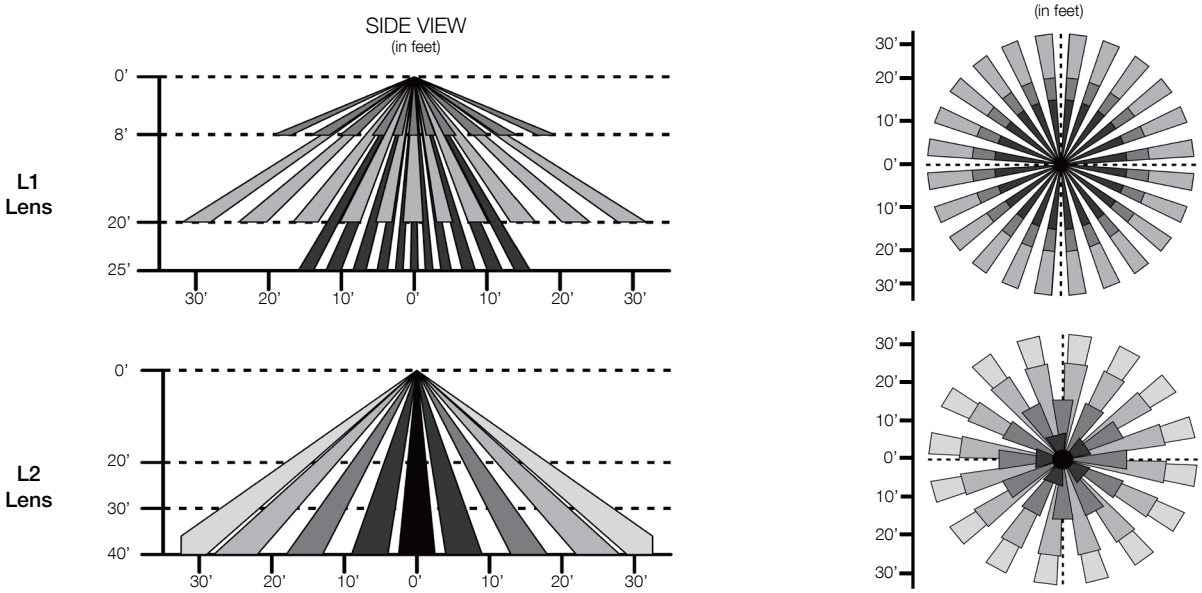
COVERAGE PATTERNS