Client:
Project:
Type:
Quantity:

# VTNSF SERIES NSF CERTIFIED VAPOR TIGHT LINEAR

## CONSTRUCTION

Polycarbonate material housing, compact design with stainless steel latches. 3/4" knockout back and end of housing for end mount sensor, through wiring or surface conduit mount.

## OPTICS

Frosted polycarbonate lens offers edge to edge smooth illumination for maximum visual comfort.

## ELECTRICAL

Delivered average 160lm/W efficacy LEDs offer 80+ color rendering index (CRI).
Field Selectable Output and CCT (see ordering information for detail).
L70 >100,000 hours expected life.
-40°C up to 50°C (-40°F up to 122°F) maximum operating temperature.
Driver operates at 120-277V Input, Dim-to-Off 0-10V driver, 12V AUX Output.
Surge protection: L-N: 6kV; L/N-GND: 6kV.
Over temperature protection.

## MOUNTING

Designed for direct wire or as a portable luminaire with use of power cord.*
Standard surface mountable underneath electrical box, or surface conduit mount through 3/4" knockout.
*Power-cord - optional add-on.

## SENSORS (OPTIONAL)

SENSOR-819W-O1 End mount on/off motion sensor highbay lens (Wet).
SENSOR-819W-D1 End mount programmable motion and photocell sensor highbay lens (Wet).
SENSOR-BLE-819W-L1 End mount ALS CONTROL Bluetooth on/off motion sensor lowbay lens (Wet).
CONTROL-LVFA AVI-ON Bluetooth Mesh Controller.
SENSOR-PH-PB-U Integral Button Style Photocell.

## STANDARD FINISH

White finish standard, IP66 for wet location.

## CERTIFICATION

IK10 Impact Rated.
National Sanitation Foundation Certified & Listed.
IP66 Wet location label standard.
Meets Buy America Act requirements.
All luminaires are built to UL1598 standards and bear appropriate cULus labels.
For Emergency application, equipment with UL924 certified battery packs.
DLC® Premium (DesignLights Consortium Qualified).

## WARRANTY

5 year warranty, see Limited Warranty for additional information.

# VTNSF SERIES NSF CERTIFIED VAPOR TIGHT LINEAR

## ORDER INFORMATION

**EXAMPLE: VTNSF 200 SC WH UD**

| Fixture | Series | Power & LM | CCT | Finish | Input |
|---|---|---|---|---|---|
| | VTNSF | | SC | GR | UD |
| Accessories Options | | | | | |

## A SERIES

| | |
|---|---|
| **VTNSF** | NSF Certified Vapor Tight Linear Field Selectable Output & CCT |

## B POWER & LM

| Code | Size | Power | LM |
|---|---|---|---|
| **135** | 4-Foot | Field Selectable 100W / 115W / 135W | 16,153 / 18,378 / 21,280lm |
| **200** | 4-Foot | Field Selectable 155W / 185W / 200W | 25,704 / 30,240 / 32,256lm |

## C CCT

| | |
|---|---|
| **MC** | Field Selectable 3500K / 4000K / 5000K |

## D FINISH

| | |
|---|---|
| **WH** | White |

## E INPUT

| | |
|---|---|
| **UD** | 120-277V Input, 0-10V Dim-to-Off |

## F ACCESSORIES/OPTIONS

| | |
|---|---|
| **BAA** | Assembled in America, Compliant with BAA (COTS) |
| **MOUNT-VTNSF-HOOK** | V Hook Mount - Chain Provided by Others |
| **EMB-18W-B*** | 90-Minute Self-Diagnostic Emergency Battery 18W 100-347VAC Input 170VDC Output |
| **EMB-18W-C-B*** | 90-Minute Self-Diagnostic Emergency Battery 18W 100-347VAC Input 170VDC Output -20°C-50°C (-4°F-122°F) |
| **REMOTE-RC100** | Handheld Remote Commissioning Tool for SENSOR-819-D1/D2 Only |
| **SENSOR-819W-O1*** | End mount on/off motion sensor lowbay lens (Wet) |
| **SENSOR-819W-D1*** | End mount on/off/dimming and photocell sensor lowbay lens (Wet) |
| **SENSOR-BLE-819W-L1*** | End Mount PIR Bluetooth Daylight Harvesting Sensor (ALS Control Mobile App) / **L1:** up to 20FT (Wet) |
| **SENSOR-PH-PB-U*** | Button Style Photocell |
| **CONTROL-LVFA*** | AVI-ON Bluetooth Mesh Control System |
| **SURGE-LSP4-U** | 10kV Surge Protector |
| **-PLUG** | 6-Foot Black Cord and Plug (3-Prong) |
| **-CORD** | 18-3 300V 6 Foot Cord |
| **TWIST-LOCK** | Specify Plug Type: **L515P** / **L715P** / **HBL5929** / **L8-20P** |

*see page 4 for sensor spec

**see page 5 for emb spec

# VTNSF SERIES NSF CERTIFIED VAPOR TIGHT LINEAR

## DIMENSIONS

| Model | L | W | H |
|---|---|---|---|
| VTNSF | 47.5” (1206mm) | 10.5” (266mm) | 4.5” (115mm) |

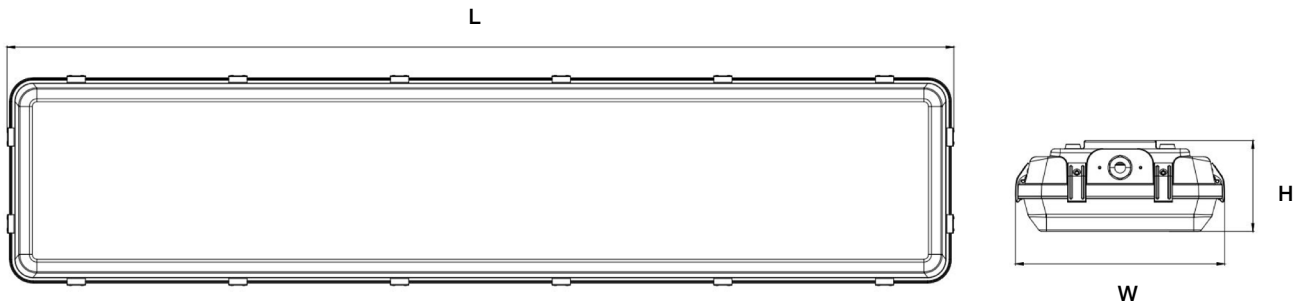


## PERFORMANCE DATA

| MODEL | SYSTEM WATTS | VOLTAGE | 3500K | | 4000K | | 5000K | |
|---|---|---|---|---|---|---|---|---|
| | | | LUMENS | LPW | LUMENS | LPW | LUMENS | LPW |
| VTNSF-135-MC | 100W | 120-277V | 15,775 | 164 | 15,932 | 173 | 16,153 | 166 |
| | 115W | 120-277V | 17,947 | 163 | 18,127 | 171 | 18,378 | 164 |
| | 135W | 120-277V | 20,781 | 160 | 20,989 | 169 | 21,280 | 162 |
| VTNSF-200-MC | 155W | 120-277V | 25,101 | 165 | 24,352 | 174 | 25,704 | 167 |
| | 185W | 120-277V | 29,531 | 163 | 29,826 | 171 | 30,240 | 165 |
| | 200W | 120-277V | 31,500 | 161 | 31,815 | 169 | 32,256 | 162 |

Advantage Lighting Solutions® - All Rights Reserved

# VTNSF SERIES NSF CERTIFIED VAPOR TIGHT LINEAR

## SENSOR SPEC

| Model | Type | Mounting | Coverage | Input | Function | Programmable |
|---|---|---|---|---|---|---|
| SENSOR-819W-O2 | PIR | 40FT | 30FT radius | Universal | On/Off | - |
| SENSOR-819W-D2 | PIR | 40FT | 30FT radius | Universal | On/Off/Dimming | REMOTE-RC100 |
| SENSOR-BLE-819W (see page 7 for detail) | PIR | **L1** - 20FT | 30FT radius | Universal | Bluetooth Mesh On/Off/Dimming Daylight Harvesting | ALS Control Bluetooth Mobile App |
| CONTROL-LVFA (see page 6 for detail) | Fixture Controller | - | - | 12V DC | Bluetooth Mesh On/Off/Dimming Scheduling | AVI-ON Bluetooth Mobile App |
| SENSOR-PH-PB-U | - | - | - | Universal | Dusk-to-Dawn Control | - |

SENSOR-819W-XX
SENSOR-BLE-819W

CONTROL-LVFA

SENSOR-PH-PB-U

# VTNSF SERIES NSF CERTIFIED VAPOR TIGHT LINEAR

## EMB SPEC

| Model | Battery Capacity | Input | Output | Output Power | Operating Temp | Installation |
|---|---|---|---|---|---|---|
| EMB-18W-B | 90mins | 100-347VAC | 170VDC | 18w | 0°C ~ 50°C<br>32°F ~ 122°F | Factory<br>or<br>Field Install |
| EMB-18W-C-B | 90mins | 100-347VAC | 170VDC | 18w | -20°C ~ 50°C<br>-4°F ~ 122°F | Factory<br>or<br>Field Install |

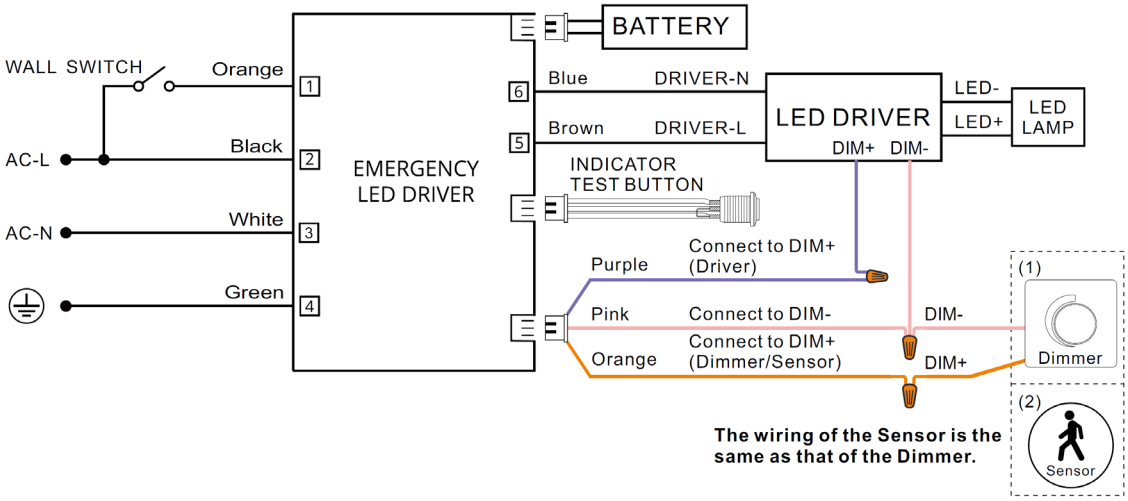

# VTNSF SERIES NSF CERTIFIED VAPOR TIGHT LINEAR

## CONTROL-LVFA SPEC

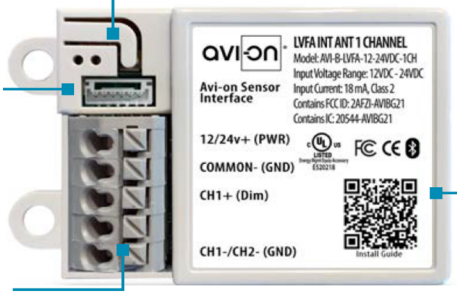


**Status LEDs & Config Button**
Quick and easy validation of wiring and network

**Direct Connect™ Sensor Port**
Simple and cost-effective addition to Avi-on sensors

**Terminal Blocks & Mounting Tabs**
Faster, easier and lower cost installation eliminating connectors

**Internal Antenna**
Improved performance and eliminates risk of accidentally cutting a hanging wire

## SPECIFICATIONS

| | |
|---|---|
| **INPUT VOLTAGE:** | 12-24VDC |
| **CURRENT:** | 15mA without a Sensor<br>19mA with a DC PIR Sensor<br>48mA with a DC Microwave Sensor |
| **0-10V DIMMING:** | 12-24VDC |
| **SIZE:** | 2.30in x 1.43in x 0.75in<br>(58.2mm x 36.4mm x 19mm) |
| **MOUNTING:** | Removable mounting tabs |
| **WEIGHT:** | 0.45 oz (16g) |
| **OPERATING TEMP:** | -22°F to +158°F (-30°C to + 70°C) |

| | |
|---|---|
| **RADIO FREQUENCY:** | 2.4GHz |
| **WIRELESS STANDARD:** | BLE 4.2 with Mesh |
| **POINT TO POINT RANGE*:** | 80ft with obstructions<br>350ft unobstructed |
| **SECURITY:** | AES 128-bit encryption for device to device communication<br>AES 256-bit encryption for device to cloud communication |
| **WARRANTY:** | 5 years; 10 years optional |
| **REGULATORY:** | FCC: 2AFZI-AVI1010 B<br>IC: 20544-AVI1010 B<br>BQB: D031801, DID: 86303<br>UL 916, 2043 (Plenum Rated) |

*When communicating through the mesh, range is essentially unlimited (5000ft+)

## WIRING DIAGRAM

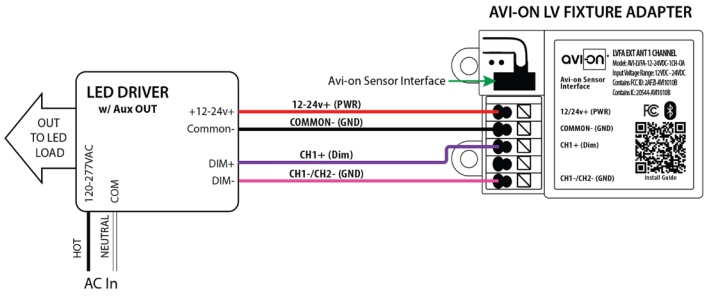


Fixture adapter powered by LED driver auxiliary output

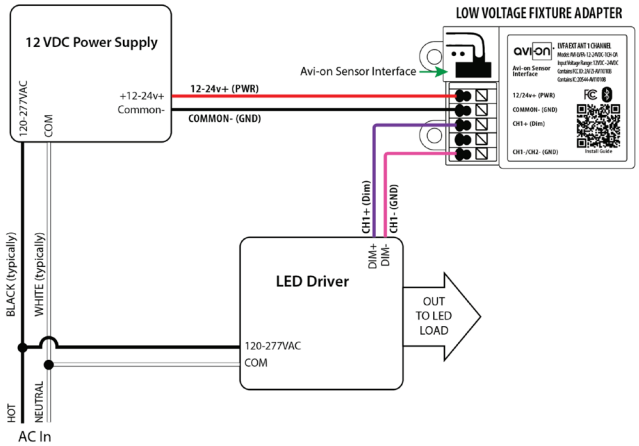


Fixture adapter connected to LED driver and using power supply

ALS CONTROL

# SENSOR-BLE-819W BLUETOOTH PIR SENSOR

Client:
Project:
Type:
Quantity:

## FEATURE

- **Installation:** Factory or Field Install End Mount to Fixture
- **Commissioning:** Wirelessly through ALS Control Mobile App (iOS / Android)
- **Certification:** DLC 5.1 Networked Lighting Control System
- **Control:** Hold time, High-Low setting, continuous Bi-level dimming, Code-compliant manual-on or auto-off capability
- **Sensor:** Motion (Occupancy/Vacancy/Manual) and Daylight Harvesting
- **Room and Zone Control:** Zoning and Grouping control, Scheduling

## SPECIFICATIONS

| | |
|---|---|
| **SENSOR TYPE:** | Passive Infrared Sensor (PIR) |
| **WIRELESS STANDARDS:** | Bluetooth SIG Mesh |
| **INPUT VOLTAGE:** | 120/277VAC |
| **CONTROL OUTPUT:** | 0-10V |
| **OPERATING TEMP:** | -40°F ~ +167°F (-40°C ~ +75°C) |
| **COMMISSIONING RANGE:** | 50FT |
| **BLUETOOTH RANGE:** | Intergral antenna up to 100FT |
| **DETECTION ANGLE:** | Vertical 90° x Horizontal 360° |
| **MOUNTING HEIGHT:** | 8 - 40FT |
| **WARRANTY:** | 5 years |
| **IP RATING:** | IP65 Wet |

## DIMENSIONS

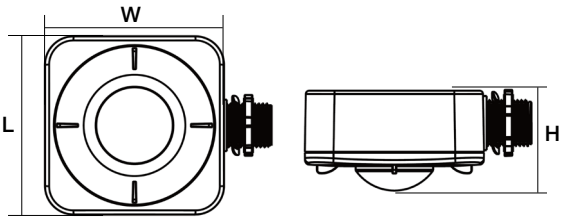


| L | W | H |
|---|---|---|
| 3.19” (81mm) | 4.02” (102mm) | 1.70” (43.3mm) |
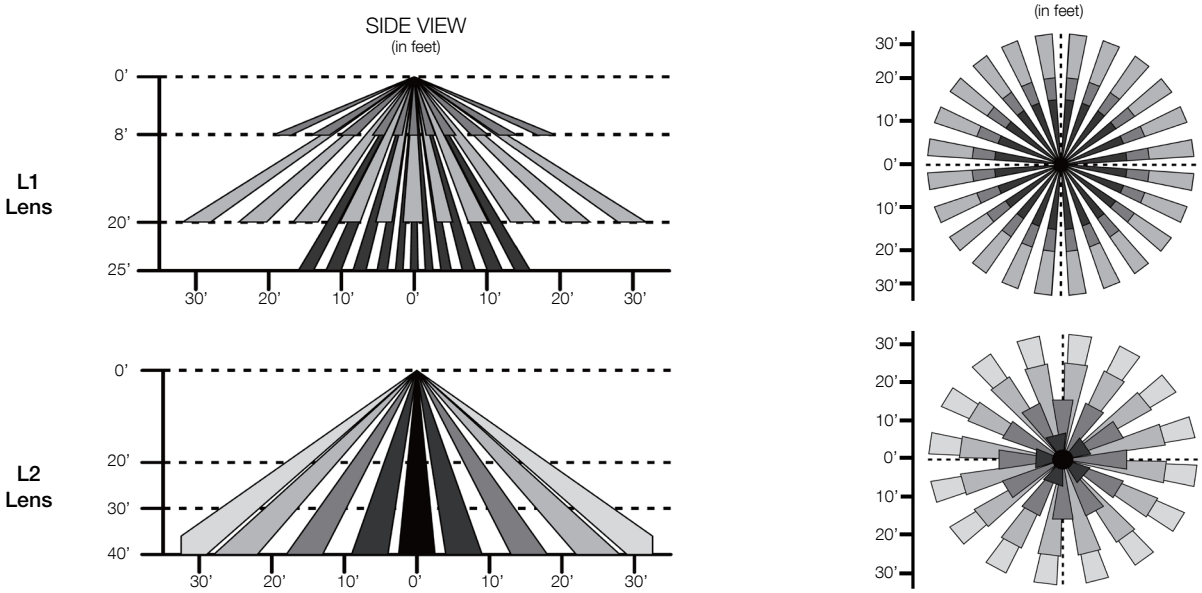
## COVERAGE PATTERNS