Client:
Project:
Type:
Quantity:

HBA2 SERIES WET LOCATION BAY LIGHT

w/Optional Sensor

CONSTRUCTION

Single piece die-cast aluminum housing, maximizes heat dissipation and life expectancy of the luminaire.
IP66 rated protection against dust and water.
IK08 rated protected against 5 joules impact, equivalent to impact of 1.7kg mass dropped from 300mm above impacted surface.
Suitable for interior/exterior, wet, high pressure washdown applications.

OPTICS

Standard clear polycarbonate lens protects LEDs against solid and liquid impact, symmetric LED board layout offers maximum uniformity illumination.

ELECTRICAL

80 CRI Lumileds LED.
-40°C up to 55°C (-40°F up to 131°F) maximum operating temperature.
Long-life 54,000 hr LED at L70.
Available with CCT / Output selectable function - **see Order Information (Pg 2)**
Universal Input 100-280V, 0-10V dimming, output 36V-42V, with 12V AUX output, 50/60Hz, <15% THD, 0.9 power factor. - **see Driver Spec (Pg 8)**
Built-in 6kV Surge Protector.
Optional dimming sensor for occupancy and ambient light level detection.

SENSOR (OPTIONAL)

SENSOR-ANT-6-4T - Plug-N-Play PIR on/off/dimming/photosensing (40FT MH).
SENSOR-ANT-6-4T-H - Plug-N-Play PIR on/off/dimming/photosensing (50FT MH).
SENSOR-BLE-6-4T - Plug-N-Play PIR ALS Control Bluetooth/on/off/dimming (40FT MH).
SENSOR-BLE-6-4T-H - Plug-N-Play PIR ALS Control Bluetooth/on/off/dimming (50FT MH).
"-EM" - Compatible with Emergency Battery (Auto-bypass)

MOUNTING

Standard Snap Hook w/Safety Cable included.
Optional 1/2" NPT Pipe to Hook Adapter.
Optional Yoke mount bracket.

FINISH

Standard corrosion resistant semi-gloss Black or White finish.

CERTIFICATION

IP66 Wet location label standard. IK08 Rated.
Meets Buy America Act requirements.
Available for BAA Compliant projects.
All luminaires are built to UL1598 standards and bear appropriate cULus labels.
For Emergency application, equipment with UL924 certified battery packs.
DLC® Premium (DesignLights Consortium Qualified)

WARRANTY

5 year warranty, see Limited Warranty for additional information.

SHIPPING DATA

Product	Measurement	Weight
HBA2-160	15"L x 15"W x 5"H	8 lb

ALS SM
Advantage Lighting Solutions

HBA2 SERIES WET LOCATION BAY LIGHT

ORDER INFORMATION

EXAMPLE : HBA2 160 SC C BK UD

	Series	Power & LM	CCT	Lens	Finish	Input
Fixture	**HBA2**			**C**	**BK**	
Mounting						
Accessories Options						

A Series

HBA2	LED Bay Light Selectable (HBA Gen 2)

B Power & LM

Code	Power (Selectable)**	Lumen
160	80W / 100W / 120W / 160W **Field Selectable	12,480 / 15,600 / 18,720 / 24,960

C CCT (Selectable)**

SC	3000K ~ 5000K **Field Selectable

D Lens

C	Clear Polycarbonated Lens

E Finish

BK	Black	**WH**	White

F Input

UD	120-277V, 0-10V Dimmable

G Mounting

blank	Snap Hook Mount w/Safety Cable (standard)
MOUNT-HB-HOOK	1/2” NPT Pipe to Hook Pendant Mount Adapter (optional)
MOUNT-HBA2-160-YM	Yoke Mount for HBA2-160 (optional)

HBA2 SERIES WET LOCATION BAY LIGHT

H Accessories/Options

BAA	Assembled in America, compliant with BAA (COTS)
SENSOR-ANT-6-4T*	Plug-N-Play PIR on/off/dimming/photosensing up to **40FT MH**
SENSOR-ANT-6-4T-EM*	Plug-N-Play PIR on/off/dimming/photosensing for **EMB application** up to **40FT MH**
SENSOR-ANT-6-4T-H*	Plug-N-Play PIR on/off/dimming/photosensing up to **50FT MH**
SENSOR-ANT-6-4T-H-EM*	Plug-N-Play PIR on/off/dimming/photosensing for **EMB application** up to **50FT MH**
SENSOR-BLE-6-4T*	Plug-N-Play Bluetooth on/off/dimming/Daylight Harvesting Sensor (ALS Control Mobile App)
SENSOR-BLE-6-4T-EM*	Plug-N-Play Bluetooth on/off/dimming/Daylight Harvesting Sensor (ALS Control Mobile App) for EMB application
SENSOR-BLE-6-4T-H*	Plug-N-Play Bluetooth on/off/dimming/Daylight Harvesting Sensor (ALS Control Mobile App) up to **50FT MH**
SENSOR-BLE-6-4T-H-EM*	Plug-N-Play Bluetooth on/off/dimming/Daylight Harvesting Sensor (ALS Control Mobile App) for EMB application up to **50FT MH**
REMOTE-RC100	Handheld Sensor Remote Control (1 per job)
EMB-40W**	Wet Location Self-Diagnostic Emergency Battery 40W 100-347VAC Input 170VDC Output
EMB-40W-550**	Wet Location Self-Diagnostic Emergency Battery 40W 480VAC Input 500VDC Output for HD Input
LENS-HB100A-AR / PR	HBA2-160 AR - Aluminum Reflector / PR - Prismatic Reflector
-CORD	18-3 300V 6 Foot Cord
-PLUG	6 Foot Cord and 3 Prong Plug
TWIST-LOCK	Specify Plug Type: L515P / L715P / HBL5929 / L8-20P

*see page 9 or sensor spec

**see page 6 for emb spec

HBA2 SERIES WET LOCATION BAY LIGHT

DIMENSIONS

Model	H1	H2	H3	W1	W2	W3
HBA2-160	5.78” (147mm)			ø 10.83”(275mm)		
LENS-HB100A-PR / AR		6.46” (164mm)			ø 13.97” (355mm)	
MOUNT-HBA2-YM			7.14” (181mm)			10.33” (262mm)

Luminaire

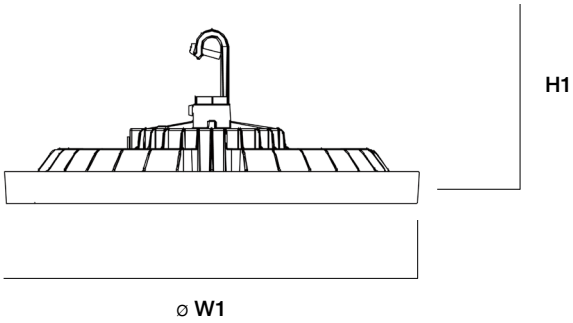

PR / AR Lens

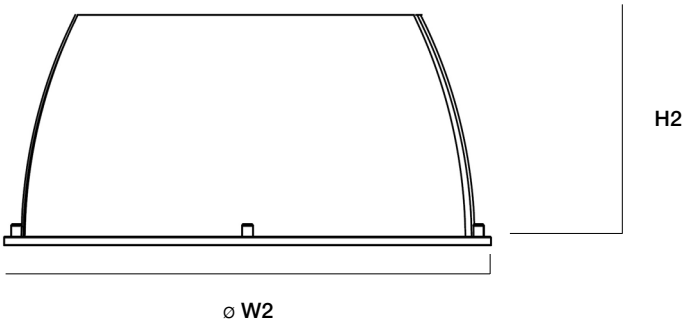

Luminaire w/Yoke

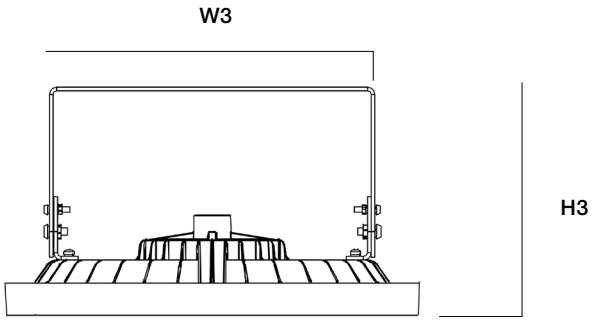

HBA2 SERIES WET LOCATION BAY LIGHT

PERFORMANCE

HBA2-160SC

Zone	Lumen	Luminaire%
0-30	9536	39.50
0-40	15620	62.30
0-60	21965	91.00
0-90	23151	100
0-180	23431	100

Lumen:	24121
Input Watts:	147.84 W
Efficacy:	163 LPW

Maximum Candela = 11316.38 Located At Horizontal Angle = 270, Vertical Angle = 17
1 - Vertical Plane Through Horizontal Angles (270 - 90) (Through Max. Cd.)
2 - Horizontal Cone Through Vertical Angle (17) (Through Max. Cd.)

IES: HBA2-160SC @ 160W 4000K

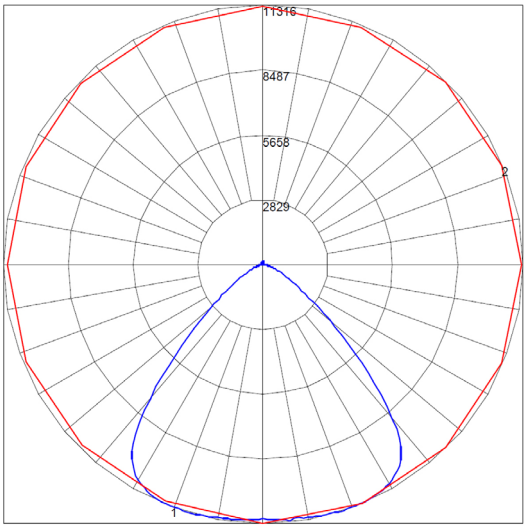

HBA2 SERIES WET LOCATION BAY LIGHT

EMERGENCY BATTERY

Model	H	W	Compatible
EMB-40W	6.80” (173.00mm)	ø 5.47” (139.00mm)	120W and above
EMB-40W-550	6.80” (173.00mm)	ø 5.47” (139.00mm)	120W and above

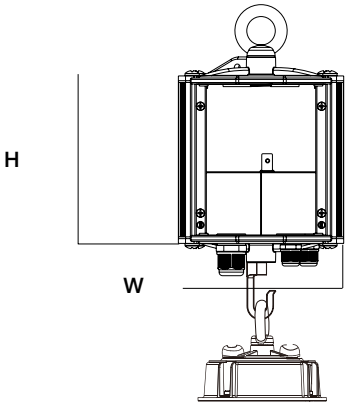

Fixture

EMERGENCY BATTERY DIAGRAM

On/Off

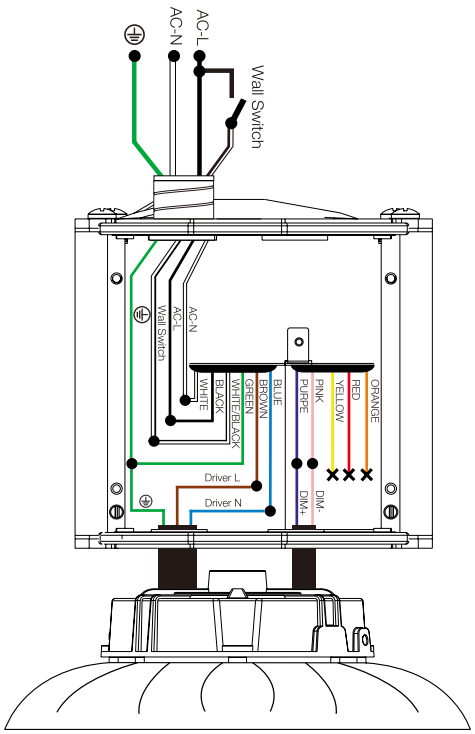

w/0-10V Dimmer

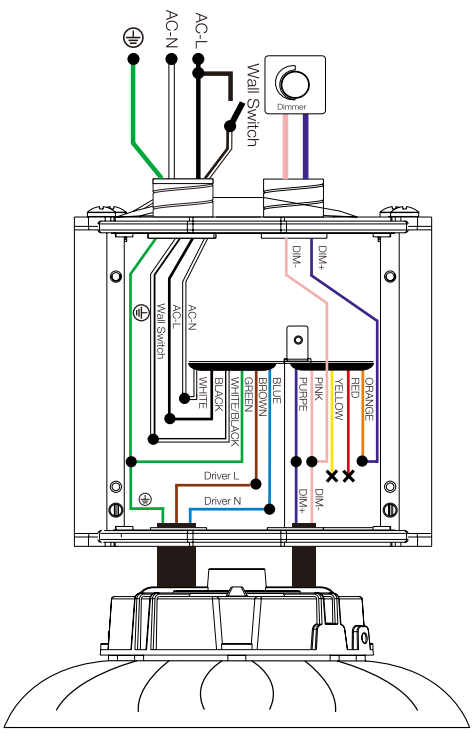

w/DC Sensor

SENSOR-ANT-6-4T

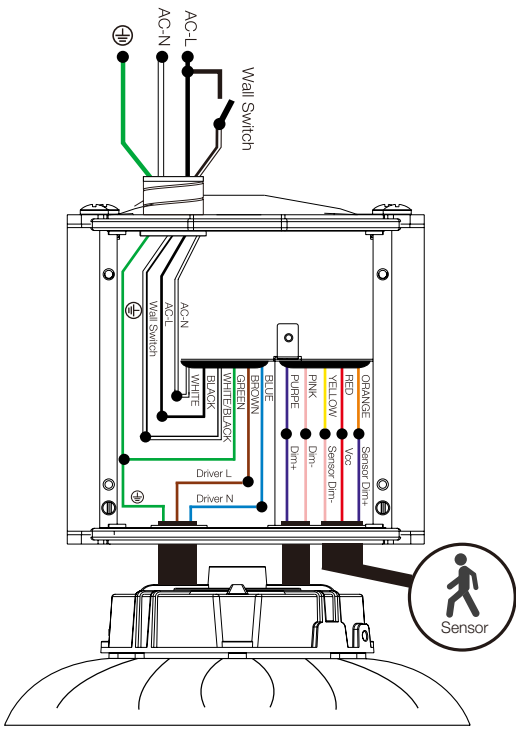

HBA2 SERIES WET LOCATION BAY LIGHT

PERFORMANCE DATA / DLC CODE

SYSTEM WATTS	CCT	VOLTAGE	LUMEN	LPW	QTY ON PALLET	PART NUMBER	DLC PRODUCT ID / ORDER CODE	DLC CLASS
HBA2-160 80W Selection	3000K	120-277V	10560	132	90	HBA2-160SC-CXXUD	Pending	DLC 5.1 Premium
	4000K	120-277V	12480	156	90		Pending	DLC 5.1 Premium
	5000K	120-277V	11760	147	90		Pending	DLC 5.1 Premium
HBA2-160 100W Selection	3000K	120-277V	13200	132	90		Pending	DLC 5.1 Premium
	4000K	120-277V	15600	156	90		Pending	DLC 5.1 Premium
	5000K	120-277V	14700	147	90		Pending	DLC 5.1 Premium
HBA2-160 120W Selection	3000K	120-277V	15840	132	90		Pending	DLC 5.1 Premium
	4000K	120-277V	18720	156	90		Pending	DLC 5.1 Premium
	5000K	120-277V	17640	147	90		Pending	DLC 5.1 Premium
HBA2-160 160W Selection	3000K	120-277V	21120	132	90		Pending	DLC 5.1 Premium
	4000K	120-277V	24960	156	90		Pending	DLC 5.1 Premium
	5000K	120-277V	23520	147	90		Pending	DLC 5.1 Premium

HBA2 SERIES WET LOCATION BAY LIGHT

DRIVER SPECIFICATION

HBA2-160 Driver Spec
- Driver Type: Potted Driver
- Input: 120-277Vac / 347~480Vac
- Output Wattage: 162.5W Max
- Output Voltage: 130Vdc Max
- Output Current: 1.155A ~ 1.25A
- Power Factor: 0.91
- THD: 17% MAX
- Dimming: 0-10V Dim to Off
- AUX Output: 12Vdc
- MAX Temp: 90°C

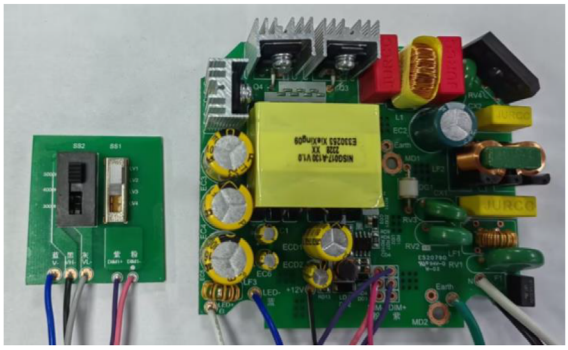

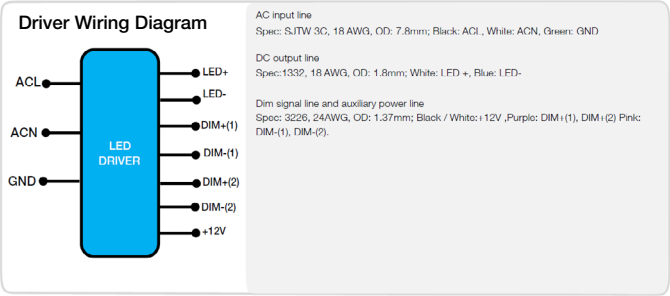

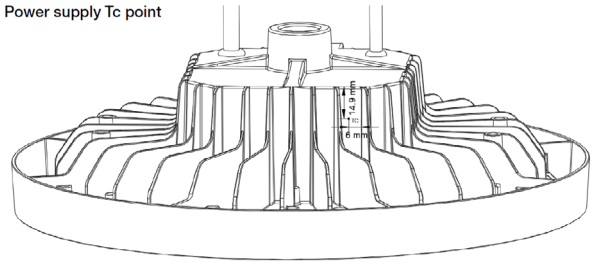

HBA2 SERIES WET LOCATION BAY LIGHT

SENSOR SPEC

Model	Type	Mounting	Coverage	Input	Function	Programmable
SENSOR-ANT-6-4T SENSOR-ANT-6-4T-EM	PIR	up to 40FT	30FT radius	12V DC	On/Off/Dimming	REMOTE-RC100
SENSOR-BLE-6-4T SENSOR-BLE-6-4T-EM (see page 10 for detail)	PIR	up to 40FT	30FT radius	12V DC	Bluetooth Mesh On/Off/Dimming Daylight Harvesting	ALS Control Bluetooth Mobile App
SENSOR-ANT-6-4T-H* SENSOR-ANT-6-4T-H-EM	PIR	up to 50FT	30FT radius	12V DC	On/Off/Dimming	REMOTE-RC100
SENSOR-BLE-6-4T-H* SENSOR-BLE-6-4T-H-EM	PIR	up to 50FT	30FT radius	12V DC	Bluetooth Mesh On/Off/Dimming Daylight Harvesting	ALS Control Bluetooth Mobile App

SENSOR-ANT-6-4T
SENSOR-ANT-6-4T-EM
SENSOR-BLE-6-4T
SENSOR-BLE-6-4T-EM
SENSOR-BLE-6-4T-H
SENSOR-BLE-6-4T-EM-H

Client:
Project:
Type:
Quantity:

SENSOR-BLE-6 BLUETOOTH PIR SENSOR

FEATURE

- **Installation:** Plug-N-Play via AUX socket on attached fixture
- **Commissioning:** Wirelessly through ALS Control Mobile App (iOS / Android)
- **Certification:** DLC 5.1 Networked Lighting Control System
- **Control:** Hold time, High-Low setting, continuous Bi-level dimming, Code-compliant manual-on or auto-off capability
- **Sensor:** Motion (Occupancy/Vacancy/Manual) and Daylight Harvesting
- **Room and Zone Control:** Zoning and Grouping control, Scheduling

SPECIFICATIONS

SENSOR TYPE:	Passive Infrared Sensor (PIR)
WIRELESS STANDARDS:	5.0 Bluetooth Mesh
STANDARD OPTION:	SENSOR-BLE-6-4T
EMB OPTION:	SENSOR-BLE-6-4T-EM (Designed for fixtures with emergency kit. When the voltage power is off, the sensor will stop working.)
INPUT VOLTAGE:	12-24VDC, >50mA
CONTROL OUTPUT:	0-10V
OPERATING TEMP:	-4°F ~ +140°F (-20°C ~ +60°C)
COMMISSIONING RANGE:	50FT
BLUETOOTH RANGE:	164FT
DETECTION ANGLE:	360°
MOUNTING HEIGHT:	Up to 40FT
WARRANTY:	5 years
IP RATING:	IP65
FACTORY DEFAULT SETTINGS:	100% Brightness for 5 min Dim Down to 30% Hold for 10 min Turn Off

DIMENSIONS

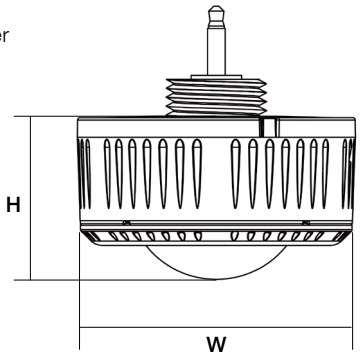

H	W
1.03” (26.2mm)	2.17” (55mm)

COVERAGE PATTERNS

SIDE VIEW
(in feet)

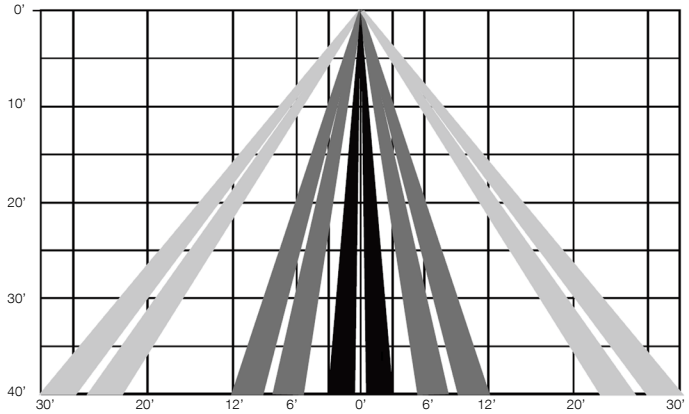

TOP VIEW
(in feet)

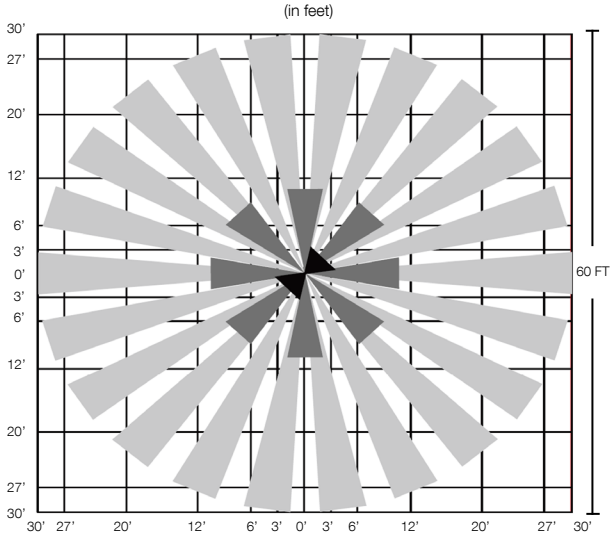

ORDER CODES

SENSOR-BLE-6-4T	“Plug-N-Play” Integral Bluetooth Daylight Harvesting Sensor (ALS Control Mobile App) up to 40FT MH.
SENSOR-BLE-6-4T-EM	“Plug-N-Play” Integral Bluetooth Daylight Harvesting Sensor (ALS Control Mobile App) up to 40FT MH w/ EMB.
SENSOR-BLE-6-4T-H	“Plug-N-Play” Integral Bluetooth Daylight Harvesting Sensor (ALS Control Mobile App) up to 50FT MH.
SENSOR-BLE-6-4T-H-EM	“Plug-N-Play” Integral Bluetooth Daylight Harvesting Sensor (ALS Control Mobile App) up to 50FT MH w/ EMB.