Client:
Project:
Type:
Quantity:

WVA SERIES WALL PACK V-SERIES

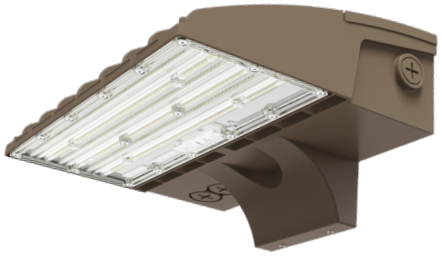

CONSTRUCTION

Die-cast aluminum housing provides durable, high-quality construction and is designed for effective heat dissipation to support reliable LED operation and long service life. Fixture is IP65 rated for wet-location outdoor applications.

OPTICS

Field-selectable optical distribution with Type II, Type III, or Type IV patterns (T2/T3/T4) adjustable. CCT and output selectable between 3000K ~ 5000K via DIP switch configuration.

ELECTRICAL

80+ CRI Lumileds LED.
-40°C up to 45°C (-40°F up to 113°F) maximum operating temperature.
150,000hr LED at L70 @ 25°C, 120,000hr LED LED at L70 @ 40°C.
Driver operates at 120-277V input, 50/60Hz, <15% THD, 0.9 power factor >90%.
0–10V dimming driver, On/Off Photocell control via DIP Switch
Three adjustable Wattage levels available for each model.
Optional 10kV surge protector.
Optional Self-Diagnostic emergency back up.

SENSORS (OPTIONAL)

SENSOR-BLE-6-4T Plug-N-Play PIR ALS Control Bluetooth/on/off/dimming/ photosensing.
SENSOR-ANT-6-4T Plug-N-Play PIR on/off/dimming/photosensing.
CONTROL-BLE-SK104-PH I Integral Bluetooth Fixture Controller w/ Button Photocell (ALS Control Mobile App)
CONTROL-LVFA AVI-ON Bluetooth Mesh Controller.

MOUNTING

Wall mount over electrical box or via surface conduit.

STANDARD FINISH

Corrosion resistant Dark Bronze powder coating finish.

CUSTOM FINISH

Black, Graphite Metallic, Gray, Silver, and White, or custom RAL#

CERTIFICATION

IP65 Wet Location listed.
Meets Buy America Act requirements.
All luminaires are built to UL1598 standards and bear appropriate cULus labels.
For Emergency application, equipped with UL924 certified battery packs.
DLC® Premium (DesignLights Consortium Qualified) listed.

WARRANTY

5 year warranty, see Limited Warranty for additional information.

ALS®
Advantage Lighting Solutions

WVA SERIES WALL PACK V-SERIES

ORDER INFORMATION

EXAMPLE: WVA 100 SC FA DB UNVD P

Fixture	Series	Power & LM	CCT	Distribution	Finish	Input	Sensor
	WVA		SC	FA			P

Accessories
Options

A SERIES

WVA	Wall Pack V-Series

B POWER & LM

Code	Power	LM
60	Field Selectable 36W / 48W / 60W	5,760lm ~ 9,600lm
100	Field Selectable 60W / 80W / 100W	9,600lm ~ 15,200lm

C CCT

SC	Field Selectable: 3000K / 4000K / 5000K

D DISTRIBUTION

FA	Field Selectable Distribution: Type II / Type III / Type IV

E FINISH

Standard

DB	Dark Bronze

Custom Color

CC	**BK**	Black	**GM**	Graphite Metallic	**GR**	Gray
	SV	Silver	**WH**	White	**RAL#**	

F INPUT

UNVD-P	120-277V, 0-10V Dimming, with Photocell
HVLD-P	347-480V, 0-10V Dimming, with Photocell

G ACCESSORIES/OPTIONS

BAA	Assembled in America, compliant with BAA (COTS)
SENSOR-ANT-6-4T*	Plug-N-Play PIR on/off/dimming/photosensing up to **40FT MH**
SENSOR-ANT-6-4T-EM*	Plug-N-Play PIR on/off/dimming/photosensing for **EMB application** up to **40FT MH**
REMOTE-RC100	Handheld Remote Commissioning Tool for SENSOR-ANT (1 per job)
SENSOR-BLE-6-4T*	Plug-N-Play Bluetooth on/off/dimming/Daylight Harvesting Sensor (ALS Control Mobile App)
SENSOR-BLE-6-4T-EM*	Plug-N-Play Bluetooth on/off/dimming/Daylight Harvesting Sensor (ALS Control Mobile App) for EMB application
SURGE-LSP4-U / H	10kV inline Surge Protection for Universal input / **U:** 120-277V, **H:** 480V input
CONTROL-BLE-SK104-PH*	Integral Bluetooth Fixture Controller w/Button Photocell (ALS Control Mobile App)
CONTROL-LVFA*	AVI-ON Bluetooth Mesh Control System
EMB-8W-Y-C**	90-Minute Self-Diagnostic Emergency Battery 8W 100-347VAC Input 300VDC Output -20°C-60°C (-4°-140°F)
EMB-9W-Y**	90-Minute Self-Diagnostic Emergency Battery 9W 100-347VAC Input 300VDC Output

*see page 5 for sensor spec

**see page 6 for emb spec

WVA SERIES WALL PACK V-SERIES

DIMENSIONS

Model	L	W	H
WVA-60 / -100	9.64” (245mm)	12.44” (316mm)	6.22” (158mm)

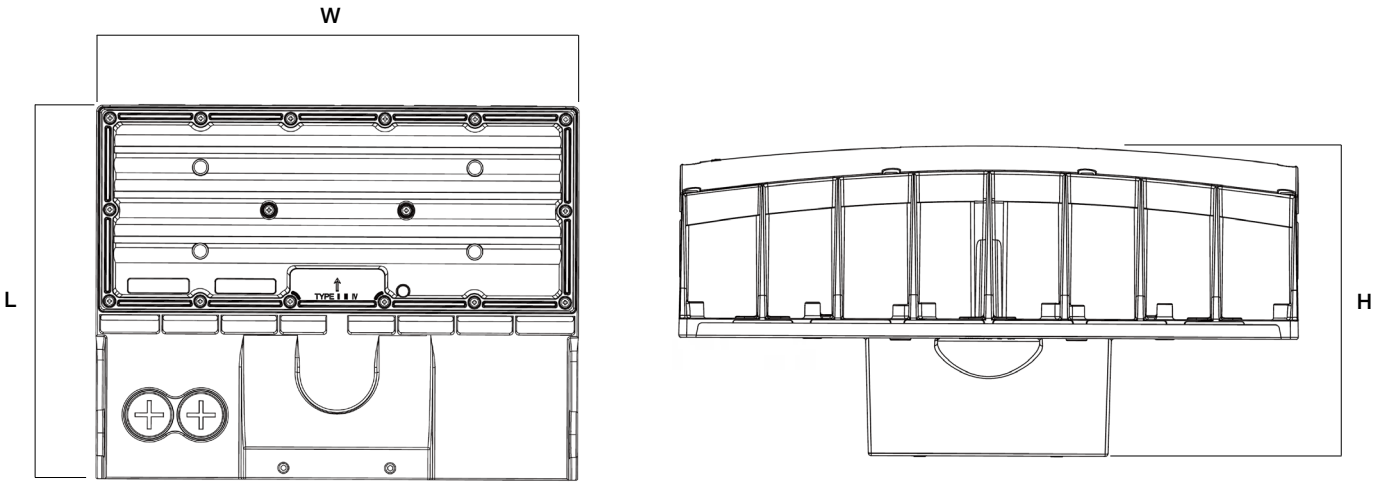

OPTIC ADJUSTABLE

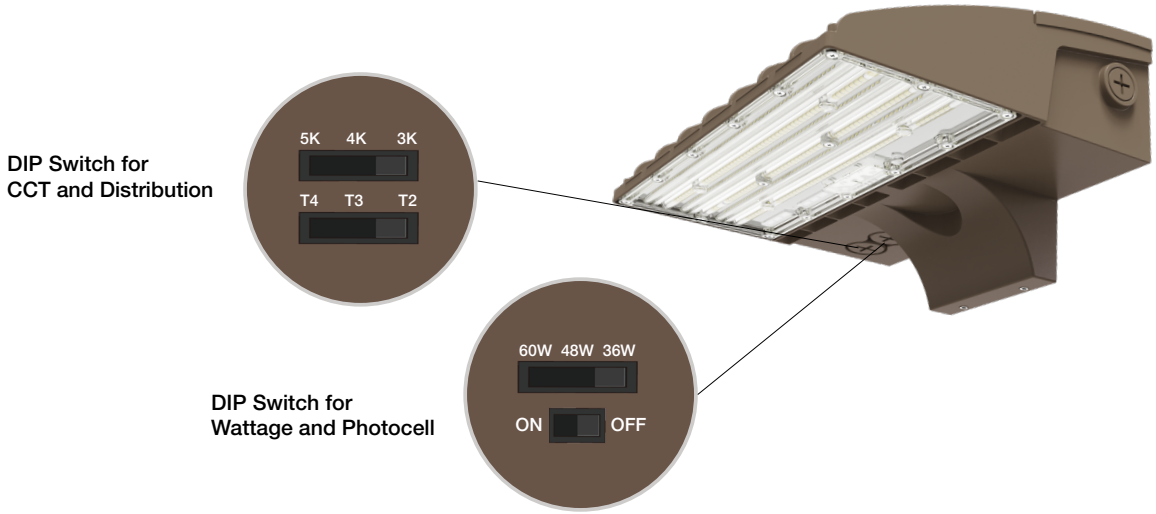

WVA SERIES WALL PACK V-SERIES

PERFORMANCE DATA

SYSTEM WATTS	LENS	DIST. TYPE	3000K			4000K			5000K		
			LUMENS	LPW	BUG RATING	LUMENS	LPW	BUG RATING	LUMENS	LPW	BUG RATING
WVA-60 @ 36W	FA	II	5705	163	B2-U0-G1	5786	170	B2-U0-G1	5778	166	B2-U0-G1
	FA	III	5589	163	B2-U0-G1	5616	168	B2-U0-G1	5787	169	B2-U0-G1
	FA	IV	5341	154	B2-U0-G1	5524	162	B2-U0-G1	5260	148	B2-U0-G1
WVA-60 @ 48W	FA	II	7266	157	B2-U0-G1	7577	168	B2-U0-G2	7320	161	B2-U0-G1
	FA	III	7135	159	B2-U0-G2	7248	166	B2-U0-G2	7407	165	B2-U0-G2
	FA	IV	6772	149	B2-U0-G2	7100	159	B2-U0-G2	6729	143	B2-U0-G2
WVA-60 @ 60W	FA	II	8774	149	B3-U0-G2	9233	163	B3-U0-G2	9176	156	B3-U0-G2
	FA	III	8844	154	B3-U0-G2	9203	164	B3-U0-G2	9192	160	B3-U0-G2
	FA	IV	8504	144	B2-U0-G2	8847	155	B2-U0-G2	8466	139	B2-U0-G2
WVA-100 @ 60W	FA	II	9400	161	B3-U0-G2	9532	169	B3-U0-G2	9351	162	B3-U0-G2
	FA	III	9277	163	B3-U0-G2	9276	168	B3-U0-G2	9493	167	B3-U0-G2
	FA	IV	8655	148	B2-U0-G2	9039	159	B2-U0-G2	8874	153	B2-U0-G2
WVA-100 @ 80W	FA	II	11972	155	B3-U0-G2	12482	167	B3-U0-G2	11847	157	B3-U0-G2
	FA	III	11844	158	B3-U0-G2	11971	165	B3-U0-G2	12151	163	B3-U0-G2
	FA	IV	10974	143	B3-U0-G2	11618	156	B3-U0-G2	11354	149	B3-U0-G2
WVA-100 @ 100W	FA	II	14457	147	B3-U0-G2	15211	161	B3-U0-G2	14851	152	B3-U0-G2
	FA	III	14680	153	B3-U0-G2	15199	164	B3-U0-G3	15079	158	B3-U0-G3
	FA	IV	13780	139	B3-U0-G2	14477	152	B3-U0-G3	14284	145	B3-U0-G3

Advantage Lighting Solutions® - All Rights Reserved

WVA SERIES WALL PACK V-SERIES

SENSOR SPEC

Model	Type	Mounting	Coverage	Input	Function	Programmable
CONTROL-LVFA (see page 7 for detail)	Fixture Controller	-	-	12V DC	Bluetooth Mesh On/Off/Dimming Scheduling	AVI-ON Bluetooth Mobile App
CONTROL-BLE-SK104-PH (see page 8 for detail)	Fixture Controller	-	-	12V DC	Bluetooth Mesh On/Off/Dimming Scheduling CCT Tuning	AVI-ON Bluetooth Mobile App
SENSOR-ANT-6-4T SENSOR-ANT-6-4T-EM (see page 9 for detail)	PIR	up to 40FT	30FT radius	12V DC	On/Off/Dimming	REMOTE-RC100
SENSOR-BLE-6-4T SENSOR-BLE-6-4T-EM (see page 11 for detail)	PIR	up to 40FT	30FT radius	12V DC	Bluetooth Mesh On/Off/Dimming Daylight Harvesting	ALS Control Bluetooth Mobile App

CONTROL-LVFA

CONTROL-BLE-SK104-PH

SENSOR-ANT-6-4T
SENSOR-ANT-6-4T-EM
SENSOR-BLE-6-4T
SENSOR-BLE-6-4T-EM

WVA SERIES WALL PACK V-SERIES

EMB SPEC

Model	Battery Capacity	Input	Output	Output Power	Operating Temp	Installation
EMB-8W-Y-C	90mins	100-347VAC	300VDC	8w	-20°C ~ 60°C -4°F ~ 140°F	Factory or Field Install
EMB-9W-Y	90mins	100-347VAC	300VDC	9w	0°C ~ 60°C 32°F ~ 140°F	Factory or Field Install

EMB-8W-Y-C

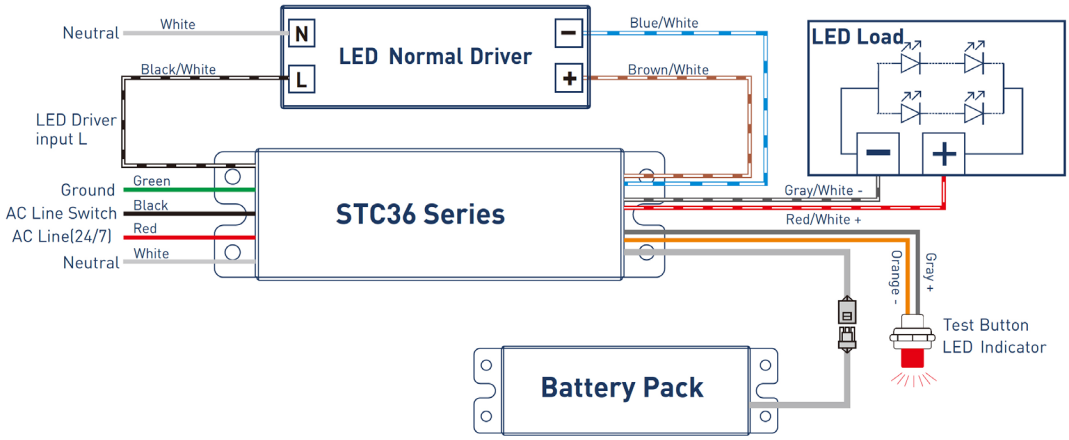

EMB-9W-Y

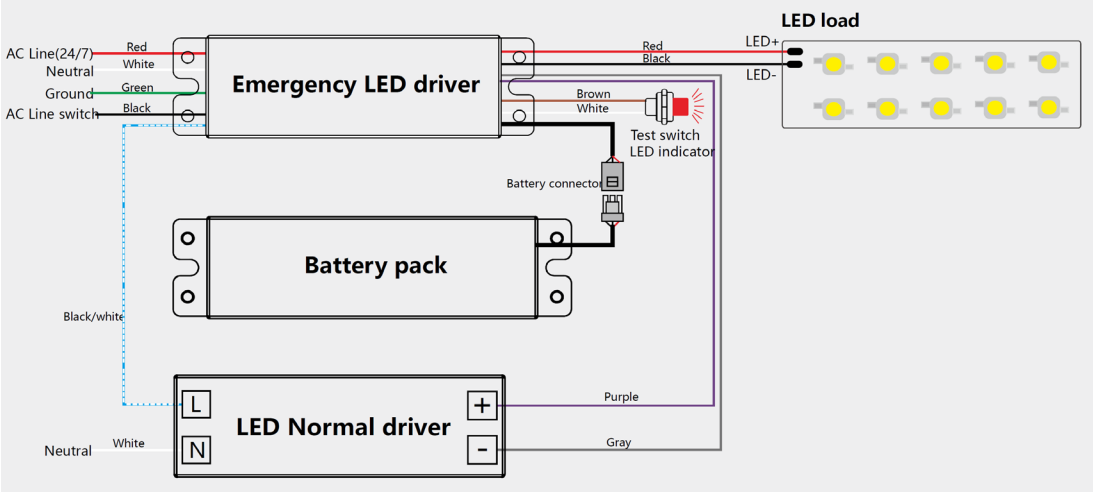

CONTROL-LVFA SPEC

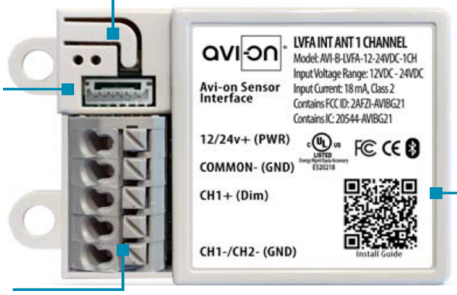

Status LEDs & Config Button
Quick and easy validation of wiring and network

Direct Connect™ Sensor Port
Simple and cost-effective addition to Avi-on sensors

Terminal Blocks & Mounting Tabs
Faster, easier and lower cost installation eliminating connectors

Internal Antenna
Improved performance and eliminates risk of accidentally cutting a hanging wire

SPECIFICATIONS

INPUT VOLTAGE:	12-24VDC
CURRENT:	15mA without a Sensor 19mA with a DC PIR Sensor 48mA with a DC Microwave Sensor
0-10V DIMMING:	12-24VDC
SIZE:	2.30in x 1.43in x 0.75in (58.2mm x 36.4mm x 19mm)
MOUNTING:	Removable mounting tabs
WEIGHT:	0.45 oz (16g)
OPERATING TEMP:	-22°F to +158°F (-30°C to + 70°C)

RADIO FREQUENCY:	2.4GHz
WIRELESS STANDARD:	BLE 4.2 with Mesh
POINT TO POINT RANGE*:	80ft with obstructions 350ft unobstructed
SECURITY:	AES 128-bit encryption for device to device communication AES 256-bit encryption for device to cloud communication
WARRANTY:	5 years; 10 years optional
REGULATORY:	FCC: 2AFZI-AVI1010 B IC: 20544-AVI1010 B BQB: D031801, DID: 86303 UL 916, 2043 (Plenum Rated)

*When communicating through the mesh, range is essentially unlimited (5000ft+)

WIRING DIAGRAM

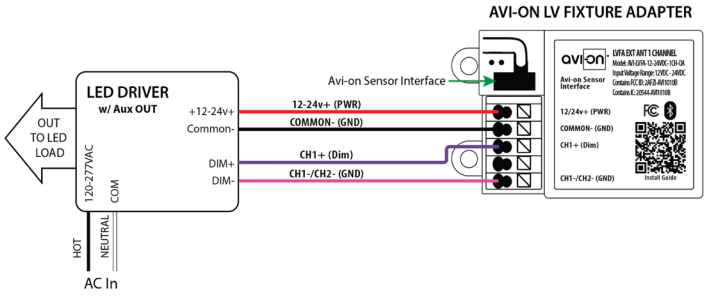

Fixture adapter powered by LED driver auxiliary output

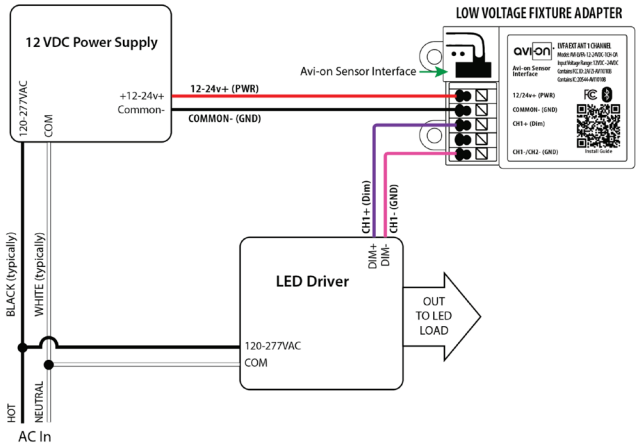

Fixture adapter connected to LED driver and using power supply

ALS CONTROL

CONTROL-BLE-SK104-PH BLUETOOTH CONTROLER

Client:
Project:
Type:
Quantity:

FEATURE

- **Installation:** Factory / Jobsite install through 1/2” knockout hole, 12V AUX power required
- **Commissioning:** Wirelessly through ALS Control Mobile App (iOS / Android)
- **Certification:** DLC 5.1 Networked Lighting Control System
- **Control:** High-End Trim, Zoning, Continuous Bi-level Dimming
- **CCT Tuning:** CCT Tuning feature for Dual/Multi-CCT LED board fixture only
- **Sensor:** Photocell
- **Zone Control:** Zoning and Grouping control, Scheduling

SPECIFICATIONS

SENSOR TYPE:	Photocell
WIRELESS STANDARDS:	5.0 Bluetooth Mesh
INPUT VOLTAGE:	12-14VDC, >50mA
CONTROL OUTPUT:	0-10V
OPERATING TEMP:	-40°F ~ +158°F (-40°C ~ +70°C)
COMMISSIONING RANGE:	50FT
BLUETOOTH RANGE:	100FT
DETECTION ANGLE:	360°
WARRANTY:	5 years
IP RATING:	IP65

DIMENSIONS

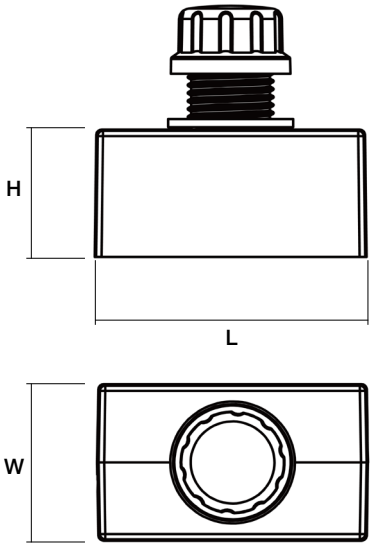

L	H	W
1.14” (29mm)	0.94” (24mm)	1.97” (50mm)

WIRING DIAGRAM

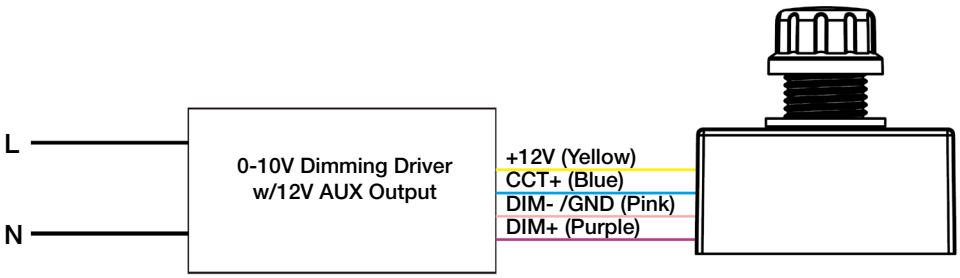

ALS CONTROL

SENSOR-ANT-6 PIR SENSOR

Client:
Project:
Type:
Quantity:

FEATURE

- **Installation:** Plug-N-Play via AUX Socket on Attached Fixture
- **Commissioning:** through Remote Control
- **Control:** Hold time, High-Low setting, Continuous Bi-Level Dimming, Code-Compliant Manual-On or Auto-Off Capability
- **Sensor:** Motion (Occupancy/Vacancy/Manual) and Daylight

SPECIFICATIONS

SENSOR TYPE:	Passive Infrared Sensor (PIR)
STANDARD OPTION:	SENSOR-ANT-6-4T
EMB OPTION:	SENSOR-ANT-6-4T-EM (Designed for fixtures with emergency kit. When the voltage power is off, the sensor will stop working.)
INPUT VOLTAGE:	12-24VDC, >30mA
LIGHT CONTROL:	10 ~ 50LUX
CONTROL OUTPUT:	0-10V
OPERATING TEMP:	-4°F ~ +140°F (-20°C ~ +60°C)
COMMISSIONING RANGE:	50FT from Remote Control
TIME SETTING:	10sec ~ 60min (adjustable)
DETECTION ANGLE:	360°
MOUNTING HEIGHT:	Up to 50FT.
WARRANTY:	5 years
IP RATING:	IP65

DIMENSIONS

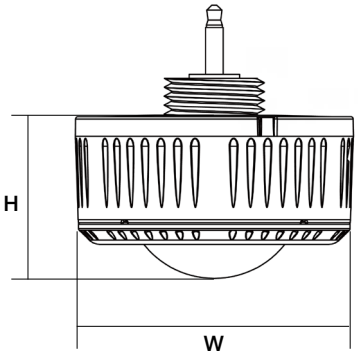

H	W
1.03” (26.2mm)	2.17” (55mm)

COVERAGE PATTERNS

SIDE VIEW
(in feet)

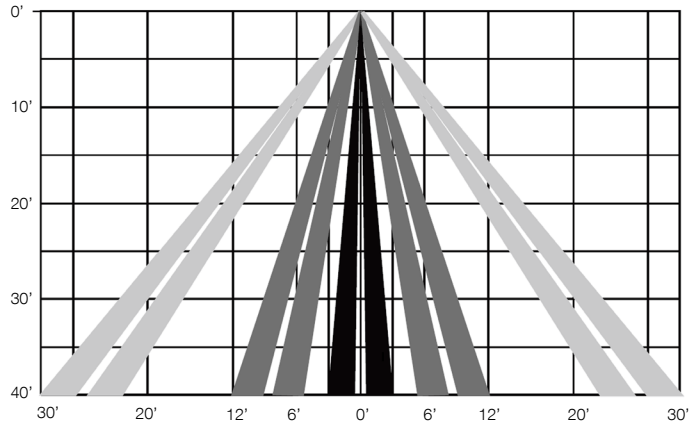

TOP VIEW
(in feet)

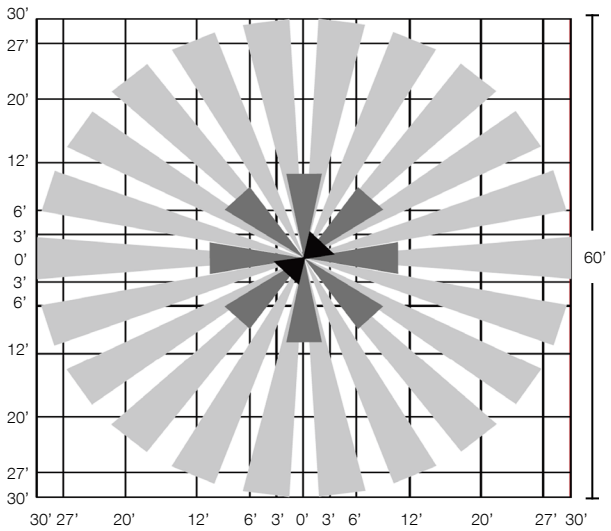

ORDER CODES

SENSOR-ANT-6-4T	Plug-N-Play PIR on/off/dimming/photosensing up to 40FT MH
SENSOR-ANT-6-4T-EM	Plug-N-Play PIR on/off/dimming/photosensing for EMB application up to 40FT MH
SENSOR-ANT-6-4T-H	Plug-N-Play PIR on/off/dimming/photosensing up to 50FT MH
SENSOR-ANT-6-4T-H-EM	Plug-N-Play PIR on/off/dimming/photosensing for EMB application up to 50FT MH

c UL us LISTED

Quick Ship

ALS CONTROL

REMOTE-RC100 SENSOR REMOTE PROGRAMMER

Client:
Project:
Type:
Quantity:

FEATURE

The Remote control wireless IR configuration tool is a handheld tool for remote configuration of IR-enabled fixture integrated sensors. The tool enables device to modify via push button and stores up to four sensor parameter modes to speed configuration of multiple sensors.

	PROGRAMMABLE	RESET
COMPATIBLE SENSORS	SENSOR-ANT-6-4T SENSOR-ANT-6-4T-EM SENSOR-ANT-6-4T-H SENSOR-ANT-6-4T-H-EM SENSOR-ANT-7 SENSOR-ANT-3C-B1 SENSOR-819-D1/D2 SENSOR-823 SENSOR-820	SENSOR-BLE-6-4T SENSOR-BLE-7 SENSOR-BLE-7D SENSOR-BLE-819 SENSOR-BLE-619 CONTROL-BLE-5-4T WALLSWITCH-BLE-101 WALLSWITCH-BLE-204

Dimension

L - 4.84” (123mm)
W - 2.76” (70mm)
H - .80” (20.3mm) Thickness

SPECIFICATION

Carrying Case
RC-100 in Carrying Case

Commissioning Range
Up to 50FT (15mm)

Operating Temp
32F ~ 122F (0°C ~ 50°C)

Power
2 x AAA 1.5V Akaline batteries

BRIGHTNESS
Set output level (in 70%, 80%, 90%, or 100%) of connected lighting during occupancy.

SENSITIVITY
Set the sensitivity (in 20%, 50%, 75%, or 100%) of the occupancy sensor.

HOLD TIME
Set the time (in 10s, 1m, 5m, 10m, 16m, 20m, 30m, or 60m) that the fixture will hold at normal output after the space is vacant.

DAYLIGHT SENSOR
Set the threshold of natural light (in 10, 30, or 50) as setpoint to light on automatically for the sensor. If natural light is above the selected threshold, fixture will shut off Set daylight (in 100, 300, 500) as setpoint to light off.

STAND-BY DIM/TIME
DIM: Set the output level (in 0%, 10%, 30%, or 50%) of the fixture during vacancy. This will only take place after Hold Time has elapsed.

TIME: Set the time (+∞, 1m, 30m, or 50m) that the sensor will remain in stand-by mode before powering down.

ON/OFF
Use this to manually power a fixture on or off.

AUTO
Press Auto to engage/unlock a sensor.
Press Auto, then press Display to show the sensors current setting parameters.

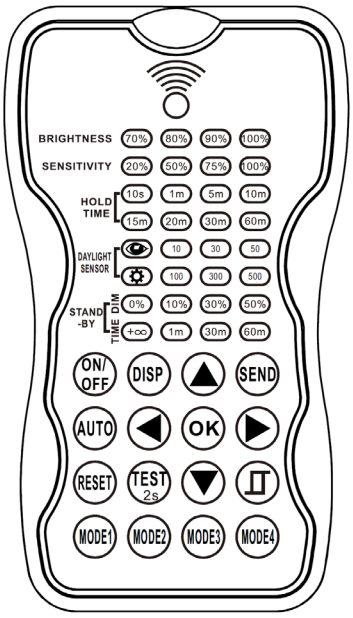

DISPLAY
Press to Display to view current setting parameters for each function. LED indicators will highlight current settings.

DIRECTIONAL ARROWS
Use the arrows to navigate the setting options by pressing up/down or left/right.

SEND
Press Send to upload displayed settings to individual sensor/fixture. The fixture will blink on and off to confirm new settings.

SMART DAYLIGHT SENSOR
Open and or close smart daylight sensor.
Press up/down arrows buttons to enter setting condition, the parameters LEDs of remote control will flash to be selected.

TEST
Used to test sensitivity of occupancy sensing.
Press Test, then the fixture will enter Test Mode, where Hold Time is only 2s.
While Test Mode is active, Stand-By and Daylight sensing will be disabled.
Press Auto to exit Test Mode.

RESET
Press Reset to put all parameters back to default settings.

MODE
Press the Mode # that you want to save.
Use Directional Arrows to select new parameters.
Press OK to confirm.

Advantage Lighting Solutions® - All Rights Reserved

ALS CONTROL

SENSOR-BLE-6 BLUETOOTH PIR SENSOR

Client:
Project:
Type:
Quantity:

FEATURE

- **Installation:** Plug-N-Play via AUX socket on attached fixture
- **Commissioning:** Wirelessly through ALS Control Mobile App (iOS / Android)
- **Certification:** DLC 5.1 Networked Lighting Control System
- **Control:** Hold time, High-Low setting, continuous Bi-level dimming, Code-compliant manual-on or auto-off capability
- **Sensor:** Motion (Occupancy/Vacancy/Manual) and Daylight Harvesting
- **Room and Zone Control:** Zoning and Grouping control, Scheduling

SPECIFICATIONS

SENSOR TYPE:	Passive Infrared Sensor (PIR)
WIRELESS STANDARDS:	5.0 Bluetooth Mesh
STANDARD OPTION:	SENSOR-BLE-6-4T
EMB OPTION:	SENSOR-BLE-6-4T-EM (Designed for fixtures with emergency kit. When the voltage power is off, the sensor will stop working.)
INPUT VOLTAGE:	12-24VDC, >50mA
CONTROL OUTPUT:	0-10V
OPERATING TEMP:	-4°F ~ +140°F (-20°C ~ +60°C)
COMMISSIONING RANGE:	50FT
BLUETOOTH RANGE:	164FT
DETECTION ANGLE:	360°
MOUNTING HEIGHT:	Up to 40FT
WARRANTY:	5 years
IP RATING:	IP65
FACTORY DEFAULT SETTINGS:	100% Brightness for 5 min Dim Down to 30% Hold for 10 min Turn Off

DIMENSIONS

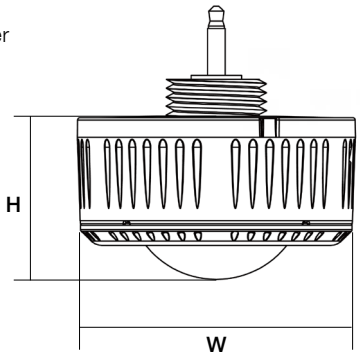

H	W
1.03” (26.2mm)	2.17” (55mm)

COVERAGE PATTERNS

SIDE VIEW
(in feet)

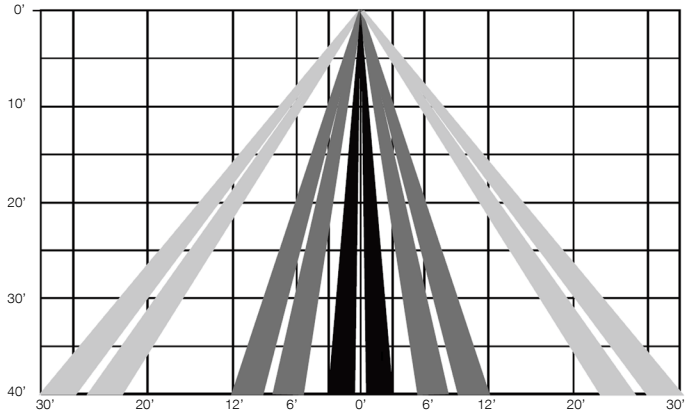

TOP VIEW
(in feet)

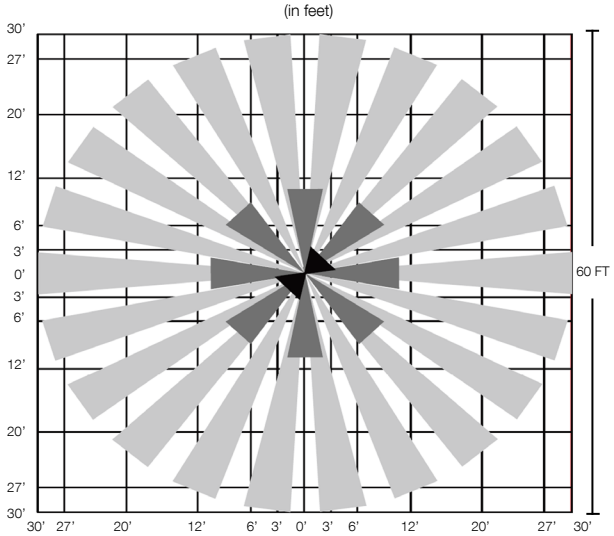

ORDER CODES

SENSOR-BLE-6-4T	“Plug-N-Play” Integral Bluetooth Daylight Harvesting Sensor (ALS Control Mobile App) up to 40FT MH.
SENSOR-BLE-6-4T-EM	“Plug-N-Play” Integral Bluetooth Daylight Harvesting Sensor (ALS Control Mobile App) up to 40FT MH w/ EMB.
SENSOR-BLE-6-4T-H	“Plug-N-Play” Integral Bluetooth Daylight Harvesting Sensor (ALS Control Mobile App) up to 50FT MH.
SENSOR-BLE-6-4T-H-EM	“Plug-N-Play” Integral Bluetooth Daylight Harvesting Sensor (ALS Control Mobile App) up to 50FT MH w/ EMB.

Advantage Lighting Solutions® - All Rights Reserved