Client:
Project:
Type:
Quantity:

LPAHC SERIES HIGH CEILING PANEL

CONSTRUCTION

Constructed of a heavy gauge steel body. Housing embossed for maximum rigidity. Rounded side flanges for safe handling, T-bar safety clips included on the side of the fixture.

OPTICS

Backlit design provides exceptional lighting distribution. Frosted PMMA lens offers edge to edge illumination without pixilation or bright spots.
12V Audio-Jack sensor socket built-in.

ELECTRICAL

Long-life, high-efficacy, micro-power LEDs, illumination for extended service life.
L_{70}>100,000 hr
Selectable lumen and CCT technology allows easy field-adjustable capability, luminaire ships with maximum output and 4000K CCT setting.
-40°C up to 50°C (-40°F up to 122°F) maximum ambient temperature.
All CCTs are within 5 MacAdam ellipses, 80CRI.
Driver operates at 120-277V input, 0-10V dimmable driver, dim-to-off voltage threshold of optional 12V AUX integrated driver ranges from 0.1V to 0.5V.
Surge protection: L-N: 6kV; L/N-GND: 6kV
Over temperature protection.

Driver enclosure de-attached from fixture

MOUNTING

Designed to accommodate lay-in ceilings, Slot T, and T-bar suspension system for 5/8" and 3/8" width. Built-in T-Bar safety clips come standard.
Suspended applications, use Cable Kit accessories.
Plaster, Sheetrock or Drywall application, use Flange Kit accessories.

SENSORS (OPTIONAL)

SENSOR-ANT-6-4T - Plug-N-Play PIR on/off/dimming/photosensing (40FT MH).
SENSOR-ANT-6-4T-H - Plug-N-Play PIR on/off/dimming/photosensing (50FT MH).
SENSOR-BLE-6-4T - Plug-N-Play PIR ALS Control Bluetooth/on/off/dimming (40FT MH).
SENSOR-BLE-6-4T-H - Plug-N-Play PIR ALS Control Bluetooth/on/off/dimming (50FT MH).
"-EM" - Compatible with Emergency Battery (Auto-bypass)
CONTROL-LVFA AVI-ON Bluetooth Mesh Controller.

SHIPPING DATA

Product	Measurement	Weight
LPAHC-2	26"L x 26"W x 6"H	9 lb
LPAHC-4	49"L x 26"W x 6"H	15 lb

STANDARD FINISH

90% minimum average reflective white polyester powder coat bonded to phosphate-free, multi-stage pretreated metal. All parts are painted after fabrication to facilitate installation, increase efficiency, and inhibit corrosion.

CERTIFICATION

Option for "Assembled in America" upon request.
Suitable for Damp location.
All luminaires are built to UL1598 standards and bear appropriate cULus labels.
For Emergency application, equipment with UL924 certified battery packs.
DLC® Standard (DesignLights Consortium Listed)

WARRANTY

5 year warranty, see Limited Warranty for additional information.

LPAHC SERIES HIGH CEILING PANEL

ORDER INFORMATION

EXAMPLE: LPAHC 4 MC BACKLIT

	Series	Model	Finish	Input
Fixture	LPAHC		blank	blank
Mounting				
Accessories Options				

A SERIES

LPAHC	LPA High Ceiling Panel

B MODEL

Code	Size	Power	CCT	lm/W (avg.)
2MC-BACKLIT	2x2	100W / 150W / 210W	4000K / 5000K	160lm/W
4MC-BACKLIT	2x4	180W / 260W / 325W	4000K / 5000K	166lm/W

C FINISH

blank	White

D INPUT

blank	Dim-to-off Driver 120-277V, 0-10V Dimming 12V AUX Output

E MOUNTING

blank	Standard lay-in
MOUNT-LP-PMK	Aircraft Cable Pendant Mount
MOUNT-LP-22-FGK	1.52” Tall 2x2 Flange Kit (Plaster, Sheetrock or Drywall)
MOUNT-LP-24-FGK	1.52” Tall 2x4 Flange Kit (Plaster, Sheetrock or Drywall)

LPAHC SERIES HIGH CEILING PANEL

F ACCESSORIES/OPTIONS

BAA	Assembled in America, compliant with BAA (COTS)
-C	3/8" x 6FT Steel Flex 5-18AWG Solid 6' leads BLK/WH/GRN/PUR/PNK & 3/8" Die Cast Screw-In Locknut Connectors
EMB-H40170*	90-Minute Self-Diagnostic Emergency Battery 40W 100-347VAC Input 170VDC Output
SENSOR-ANT-6-4T*	Plug-N-Play PIR on/off/dimming/photosensing up to **40FT MH**
SENSOR-ANT-6-4T-EM*	Plug-N-Play PIR on/off/dimming/photosensing for **EMB application** up to **40FT MH**
SENSOR-ANT-6-4T-H*	Plug-N-Play PIR on/off/dimming/photosensing up to **50FT MH**
SENSOR-ANT-6-4T-H-EM*	Plug-N-Play PIR on/off/dimming/photosensing for **EMB application** up to **50FT MH**
SENSOR-BLE-6-4T*	Plug-N-Play Bluetooth on/off/dimming/Daylight Harvesting Sensor (ALS Control Mobile App)
SENSOR-BLE-6-4T-EM*	Plug-N-Play Bluetooth on/off/dimming/Daylight Harvesting Sensor (ALS Control Mobile App) for EMB application
SENSOR-BLE-6-4T-H*	Plug-N-Play Bluetooth on/off/dimming/Daylight Harvesting Sensor (ALS Control Mobile App) up to **50FT MH**
SENSOR-BLE-6-4T-H-EM*	Plug-N-Play Bluetooth on/off/dimming/Daylight Harvesting Sensor (ALS Control Mobile App) for EMB application up to **50FT MH**
GTD-ESRLUD**	Emergency Battery Generator Transfer Device 120-277 VAC Input
REMOTE-RC100	Handheld Remote Commissioning Tool for SENSOR-ANT (1 per job)
CONTROL-LVFA*	AVI-ON Bluetooth Mesh Control System (12V DC Power by Driver)

*see page 6 for sensor and emb spec

**see page 10 and 11 for GTD spec

LPAHC SERIES HIGH CEILING PANEL

DIMENSIONS

Model	L	W	D
LPAHC-2	23.70” (603mm)	23.70” (603mm)	3.40” (86mm)
LPAHC-4	47.80” (1213mm)	23.70” (603mm)	3.40” (86mm)

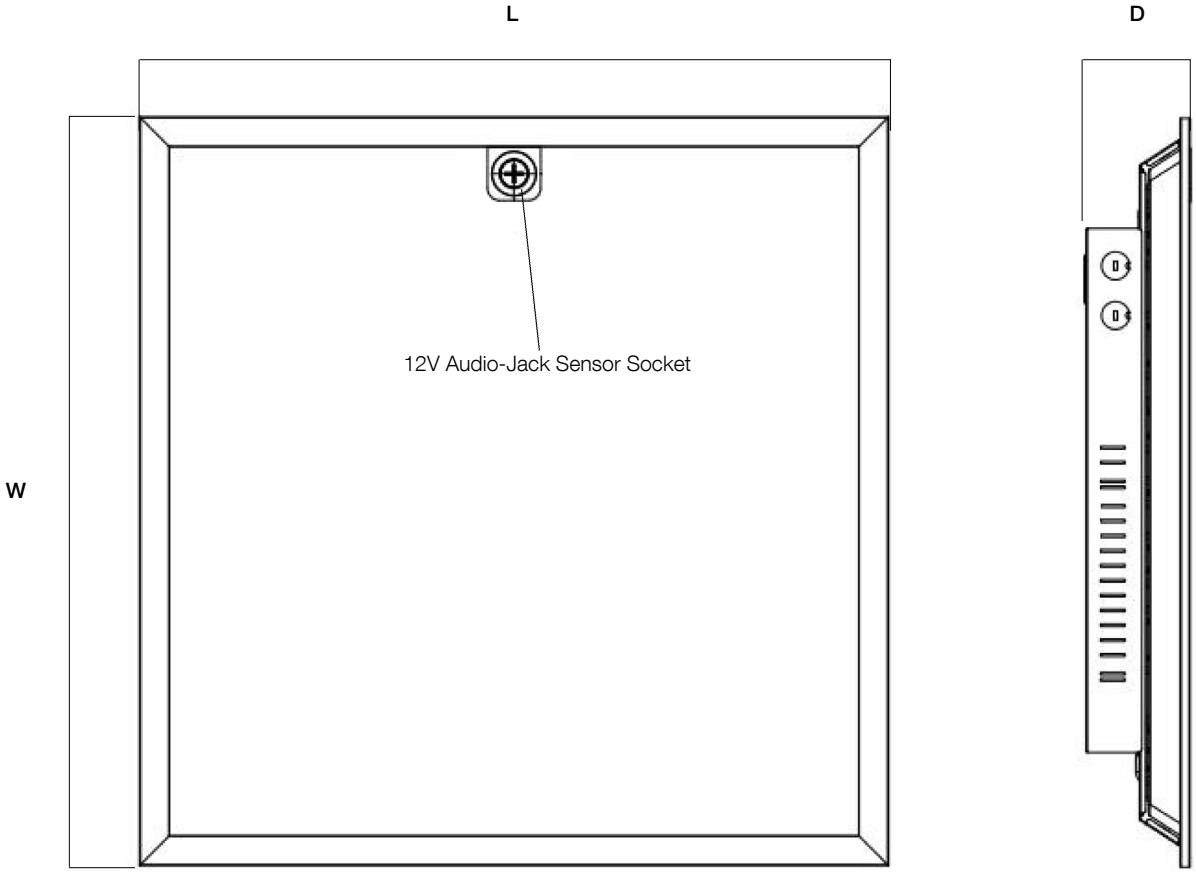

LPAHC SERIES HIGH CEILING PANEL

PERFORMANCE DATA - LPA

SYSTEM WATTS	SIZE	VOLTAGE	ACTUAL CONSUMPTION	LUMEN	LPW
100	LPAHC-2MC-BACKLIT	120-277V	99W	15840	160
150	LPAHC-2MC-BACKLIT	120-277V	148W	23680	160
210	LPAHC-2MC-BACKLIT	120-277V	208W	33282	160
180	LPAHC-4MC-BACKLIT	120-277V	175W	29050	166
260	LPAHC-4MC-BACKLIT	120-277V	253W	41998	166
325	LPAHC-4MC-BACKLIT	120-277V	316W	52604	166

DLC CODE

Part Number	DLC Product ID	DLC Class
LPAHC-2MC-BACKLIT (2x2)	S-FN4Y4T	Premium 6.0
LPAHC-4MC-BACKLIT (2x4)	S-WXFLB5	Premium 6.0

LPAHC SERIES HIGH CEILING PANEL

SENSOR SPEC

Model	Type	Mounting	Coverage	Input	Function	Programmable
SENSOR-ANT-6-4T SENSOR-ANT-6-4T-H SENSOR-ANT-6-4T-EM-H (see page 7 for detail)	PIR	up to 40FT up to 50FT	30FT radius	12V DC	On/Off/Dimming	REMOTE-RC100
SENSOR-BLE-6-4T SENSOR-BLE-6-4T-H SENSOR-BLE-6-4T-EM-H (see page 8 for detail)	PIR	up to 40FT up to 50FT	30FT radius	12V DC	Bluetooth Mesh On/Off/Dimming Daylight Harvesting	ALS Control Bluetooth Mobile App
CONTROL-LVFA (see page 9 for detail)	-	-	-	12V DC	Bluetooth Mesh On/Off/Dimming Scheduling	AVI-ON Bluetooth Mobile A

SENSOR-ANT-6-4T / 4T-H /4T-EM-H
SENSOR-BLE-6-4T / 4T-H/ 4T-EM-H

CONTROL-LVFA

EMB SPEC

Model	Battery Capacity	Input	Output	Output Power	Operating Temp	Installation
EMB-H40170	90mins	100-347VAC	170VDC	40W	0°C ~ 50°C 32°F ~ 122°F	Factory or Field Install

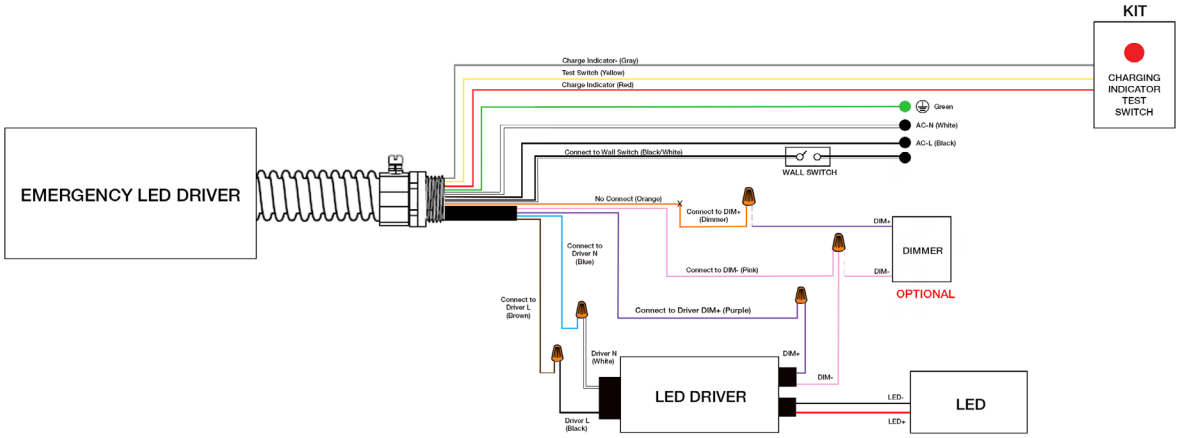

ALS CONTROL

SENSOR-ANT-6 PIR SENSOR

Client:
Project:
Type:
Quantity:

FEATURE

- **Installation:** Plug-N-Play via AUX Socket on Attached Fixture
- **Commissioning:** through Remote Control
- **Control:** Hold time, High-Low setting, Continuous Bi-Level Dimming, Code-Compliant Manual-On or Auto-Off Capability
- **Sensor:** Motion (Occupancy/Vacancy/Manual) and Daylight

SPECIFICATIONS

SENSOR TYPE:	Passive Infrared Sensor (PIR)
STANDARD OPTION:	SENSOR-ANT-6-4T
EMB OPTION:	SENSOR-ANT-6-4T-EM (Designed for fixtures with emergency kit. When the voltage power is off, the sensor will stop working.)
INPUT VOLTAGE:	12-24VDC, >30mA
LIGHT CONTROL:	10 ~ 50LUX
CONTROL OUTPUT:	0-10V
OPERATING TEMP:	-4°F ~ +140°F (-20°C ~ +60°C)
COMMISSIONING RANGE:	50FT from Remote Control
TIME SETTING:	10sec ~ 60min (adjustable)
DETECTION ANGLE:	360°
MOUNTING HEIGHT:	Up to 50FT.
WARRANTY:	5 years
IP RATING:	IP65

DIMENSIONS

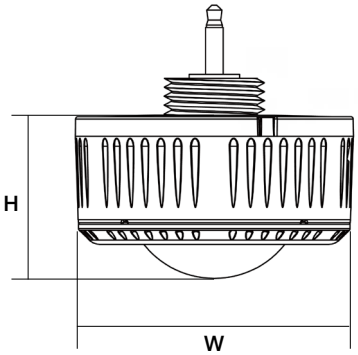

H	W
1.03” (26.2mm)	2.17” (55mm)

COVERAGE PATTERNS

SIDE VIEW
(in feet)

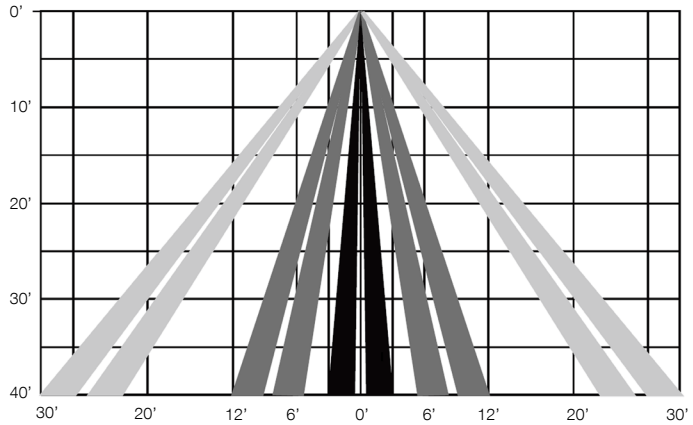

TOP VIEW
(in feet)

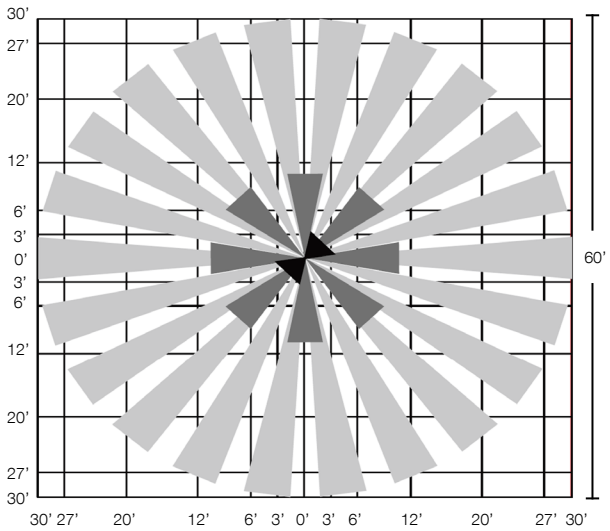

ORDER CODES

SENSOR-ANT-6-4T	Plug-N-Play PIR on/off/dimming/photosensing up to 40FT MH
SENSOR-ANT-6-4T-EM	Plug-N-Play PIR on/off/dimming/photosensing for EMB application up to 40FT MH
SENSOR-ANT-6-4T-H	Plug-N-Play PIR on/off/dimming/photosensing up to 50FT MH
SENSOR-ANT-6-4T-H-EM	Plug-N-Play PIR on/off/dimming/photosensing for EMB application up to 50FT MH

c UL us LISTED

Quick Ship

ALS CONTROL

SENSOR-BLE-6 BLUETOOTH PIR SENSOR

Client:
Project:
Type:
Quantity:

FEATURE

- **Installation:** Plug-N-Play via AUX socket on attached fixture
- **Commissioning:** Wirelessly through ALS Control Mobile App (iOS / Android)
- **Certification:** DLC 5.1 Networked Lighting Control System
- **Control:** Hold time, High-Low setting, continuous Bi-level dimming, Code-compliant manual-on or auto-off capability
- **Sensor:** Motion (Occupancy/Vacancy/Manual) and Daylight Harvesting
- **Room and Zone Control:** Zoning and Grouping control, Scheduling

SPECIFICATIONS

SENSOR TYPE:	Passive Infrared Sensor (PIR)
WIRELESS STANDARDS:	5.0 Bluetooth Mesh
STANDARD OPTION:	SENSOR-BLE-6-4T
EMB OPTION:	SENSOR-BLE-6-4T-EM (Designed for fixtures with emergency kit. When the voltage power is off, the sensor will stop working.)
INPUT VOLTAGE:	12-24VDC, >50mA
CONTROL OUTPUT:	0-10V
OPERATING TEMP:	-4°F ~ +140°F (-20°C ~ +60°C)
COMMISSIONING RANGE:	50FT
BLUETOOTH RANGE:	164FT
DETECTION ANGLE:	360°
MOUNTING HEIGHT:	Up to 40FT
WARRANTY:	5 years
IP RATING:	IP65
FACTORY DEFAULT SETTINGS:	100% Brightness for 5 min Dim Down to 30% Hold for 10 min Turn Off

DIMENSIONS

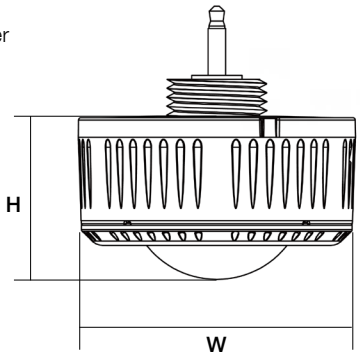

H	W
1.03” (26.2mm)	2.17” (55mm)

COVERAGE PATTERNS

SIDE VIEW
(in feet)

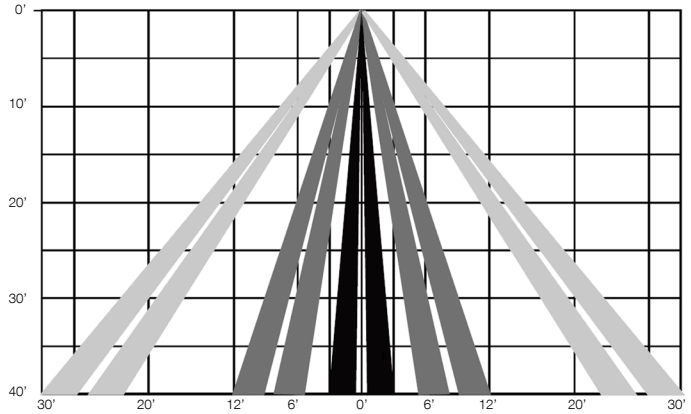

TOP VIEW
(in feet)

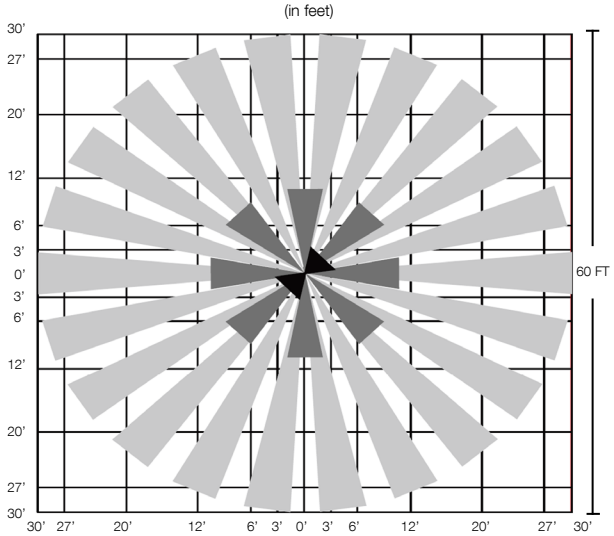

ORDER CODES

SENSOR-BLE-6-4T	“Plug-N-Play” Integral Bluetooth Daylight Harvesting Sensor (ALS Control Mobile App) up to 40FT MH.
SENSOR-BLE-6-4T-EM	“Plug-N-Play” Integral Bluetooth Daylight Harvesting Sensor (ALS Control Mobile App) up to 40FT MH w/ EMB.
SENSOR-BLE-6-4T-H	“Plug-N-Play” Integral Bluetooth Daylight Harvesting Sensor (ALS Control Mobile App) up to 50FT MH.
SENSOR-BLE-6-4T-H-EM	“Plug-N-Play” Integral Bluetooth Daylight Harvesting Sensor (ALS Control Mobile App) up to 50FT MH w/ EMB.

Advantage Lighting Solutions® - All Rights Reserved

CONTROL-AVI-LVFA SPEC

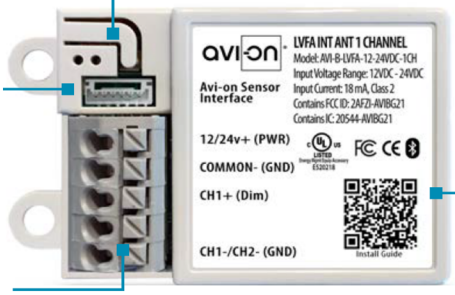

Status LEDs & Config Button
Quick and easy validation of wiring and network

Direct Connect™ Sensor Port
Simple and cost-effective addition to Avi-on sensors

Terminal Blocks & Mounting Tabs
Faster, easier and lower cost installation eliminating connectors

Internal Antenna
Improved performance and eliminates risk of accidentally cutting a hanging wire

SPECIFICATIONS

INPUT VOLTAGE:	12-24VDC
CURRENT:	15mA without a Sensor 19mA with a DC PIR Sensor 48mA with a DC Microwave Sensor
0-10V DIMMING:	12-24VDC
SIZE:	2.30in x 1.43in x 0.75in (58.2mm x 36.4mm x 19mm)
MOUNTING:	Removable mounting tabs
WEIGHT:	0.45 oz (16g)
OPERATING TEMP:	-22°F to +158°F (-30°C to + 70°C)

RADIO FREQUENCY:	2.4GHz
WIRELESS STANDARD:	BLE 4.2 with Mesh
POINT TO POINT RANGE*:	80ft with obstructions 350ft unobstructed
SECURITY:	AES 128-bit encryption for device to device communication AES 256-bit encryption for device to cloud communication
WARRANTY:	5 years; 10 years optional
REGULATORY:	FCC: 2AFZI-AVI1010 B IC: 20544-AVI1010 B BQB: D031801, DID: 86303 UL 916, 2043 (Plenum Rated)

*When communicating through the mesh, range is essentially unlimited (5000ft+)

WIRING DIAGRAM

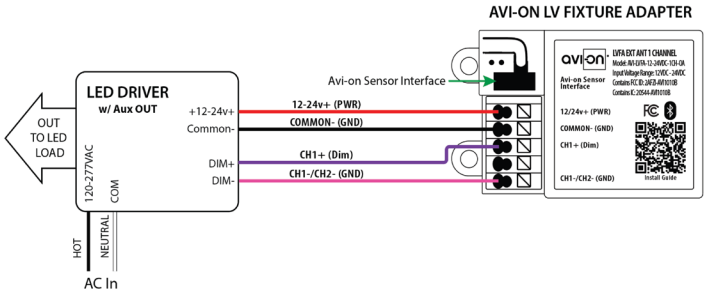

Fixture adapter powered by LED driver auxiliary output

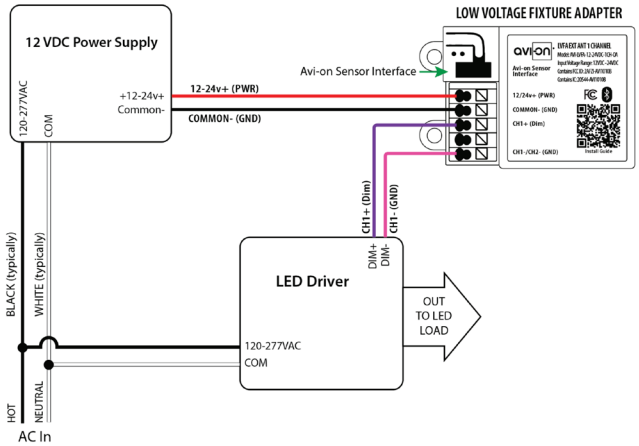

Fixture adapter connected to LED driver and using power supply

Client:
Project:
Type:
Quantity:

GTD-ESRLUD Generator Transfer Device

CONSTRUCTION

Yellow metal casing. Integrates with dry contact systems to provide lighting during power outages. Features a slim enclosure, allowing for seamlessly integrating into existing building infrastructure.
Designed for commercial and industrial applications that require an emergency load to be switched on during a loss of normal power.

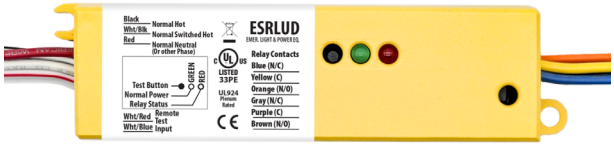

SPECIFICATIONS

COIL CURRENT:	Normal Power = 6mA MAX
COIL VOLTAGE INPUT:	120-277V AC (50/60 Hz)
EXPECTED RELAY LIFE:	10 Million Cycles Min Mechanical
RELAY CONTACT RATINGS:	10 Amp Resistive @ 30 V DC 10 Amp General Use @ 277 V AC
OPERATING TEMP:	-30°F ~ +140°F (-34°C ~ +60°C)
OPERATE TIME:	18ms
HUMIDITY RANGE:	5-95% (Noncondensing)
LED:	Green = Normal Power Red = Relay Status
DIMENSIONS:	1.40”H x 5.63”W x 1.00”D
WIRES:	16”, 600V Rated
OVERRIDE (TEST SWITCH):	No
APPROVALS:	UL924, C-UL, CE, ROHS
NOTES:	Device Draws no Current From Emergency Source

TESTING

INITIAL TEST FOR CORRECT WIRING:	Apply Normal Power To Normal Power Input a. Green LED (Normal Power) should be ON b. Red LED (Relay Status) should be ON c. Load should be OFF d. Relay Contact (N/O) should be CLOSED
LOCAL TEST BUTTON:	1. Turn Switched Circuit OFF. Load be OFF. 2. Press and Hold “Local Test Button” 3. Load should Turn ON 4. Release “Local Test Button” and Emergency Light should Turn OFF.
WALL SWITCH:	1. Turn ON Wall Switch If not already ON 2. Load should Turn ON 3. Turn Wall Switch OFF 4. Load will Turn OFF

TROUBLESHOOTING

CONDITION	ACTION
Green LED is OFF	• Check Normal Power Input Wiring (Black and Red Wires) and Voltage.
Red LED is OFF but Load is OFF	• Check Bulbs and Ballast. • Check Load Wiring (Blue Wire and Load’s Neutral). • Replace Unit. (Assuming N/C Contact is Used).
Load is ON but Red LED is ON	• Replace Unit. (Assuming N/C Contact is Used).
Red LED does not Turn OFF and Load does not Turn ON when being tested	• Check Bulbs and Ballast. • Check Wiring Connections if Using a Remote Test Option. • Press Local Test Button on the Unit. • Replace Unit.
Red LED will not Turn ON and Load will not Turn OFF	• Verify Status of Normal Power Input. • Open Wall Switch Input. • Verify That No Test Inputs are Stuck Closed.

Advantage Lighting Solutions® - All Rights Reserved

GTD-ESRLUD Generator Transfer Device

WIRING DIAGRAM

USING EMERGENCY LIGHTING AS NORMAL LIGHTING

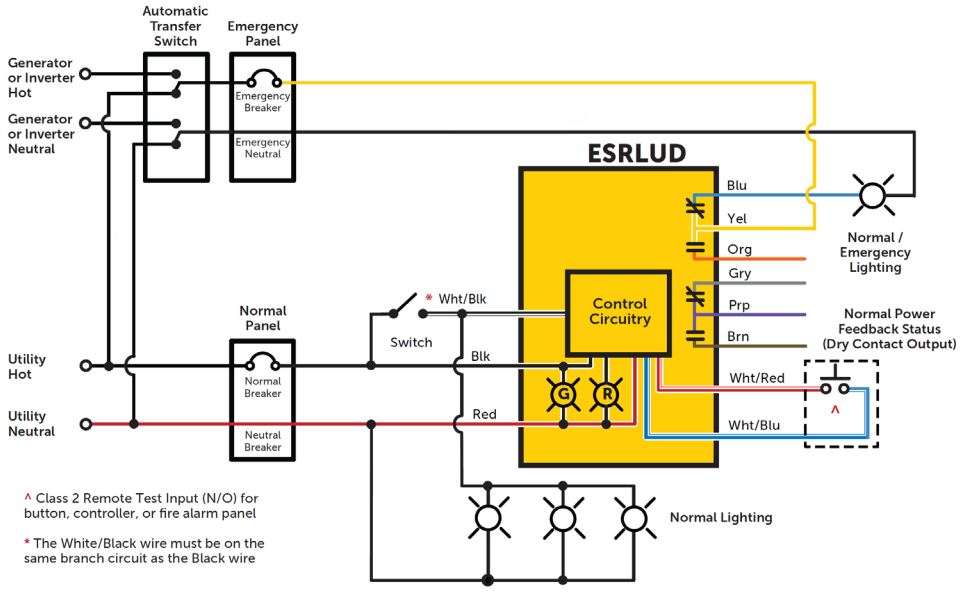
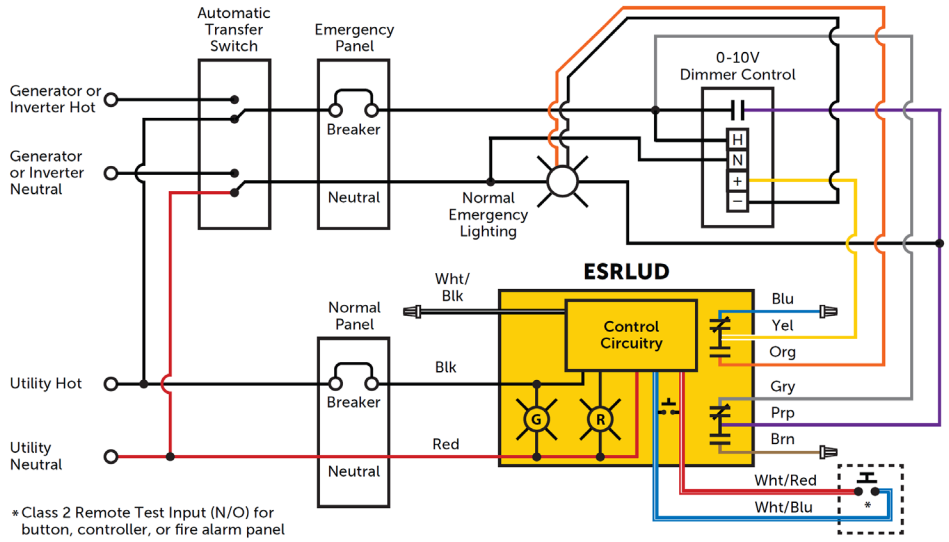
OVERRIDING A 0-10V DIMMER