Client:
Project:
Type:
Quantity:

ARD-G2 SERIES ROADWAY

CONSTRUCTION
Rugged die-cast aluminum housing with removable door. Low profile, 3G vibration rated to ensure the stength of construction and minimize wind load requirements. LED lens housing is completely sealed against moisture and environmental contaminants.
Wet location listed.

ARD-G2-101

OPTICS
Available in Type II, III, and IV distributions.
Optics are precisely designed to shape the distribution, maximizing efficiency and application spacing.

ARD-G2-201

ELECTRICAL
70+ CRI LED.
-40°C up to 40°C (-40°F up to 104°F) maximum operating temperature.
Long-life 100,000 hr LED at L70 @ 25°C.
Driver operates at 120-277V input, 0-10V dimmable driver, 10-100% dimming range.
50/60Hz, <11% THD, 0.9 power factor.
Four field selectable wattage levels for each model.
CCT options from 3000K, 4000K, and 5000K.
Standard 3-PIN NEMA Photocell.
Optional 277-480V input.

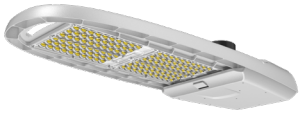

ARD-G2-301

SENSORS (OPTIONAL)
SENSOR-BLE-619 Integral PIR Bluetooth Daylight Sensor (ALS Control Mobile App).
CONTROL-AVI-ON Bluetooth Mesh Controller.

MOUNTING
Compatible with mast arm 1-5/8” ~ 2-3/8” OD.

STANDARD FINISH
Corrosion resistant Silver Gray powder coating finish.

CERTIFICATION
Wet location label standard.
Meets Buy America Act requirements.
IDA Compliant: with 3000K color temperature selection.
All luminaires are built to UL1598 standards and bear appropriate cULus labels.

WARRANTY
5 year warranty, see Limited Warranty for additional information.

ARD-G2 SERIES ROADWAY

ORDER INFORMATION

EXAMPLE : ARD-G2 101 40 T3 SG UNVD PT

Fixture	Series	Power & LM	CCT	Distribution	Finish	Input	Photocell
	ARD-G2						PT

A SERIES

ARD-G2	Roadway

B POWER & LM

Code	Power	LM
101	Field Selectable 41W / 61W / 81W / 101W	7,100lm ~ 15,500lm
201	Field Selectable 81W / 121W / 161W / 201W	14,000lm ~ 31,000lm
301	Field Selectable 121W / 181W / 241W / 301W	21,000lm ~ 46,200lm

C CCT

30	3000K
40	4000K
50	5000K

D DISTRIBUTION

T2	Type II
T3	Type III
T4	Type IV

E FINISH

SG	Silver Gray

F INPUT

UNVD	120-277V, 0-10V Dimming
HVLD	277-480V, 0-10V Dimming

G PHOTOCELL

PT	3-PIN NEMA Twist Lock Photocell

Advantage Lighting Solutions® - All Rights Reserved

ORDER INFORMATION (CONTINUED)

Accessories
Options

H ACCESSORIES/OPTIONS

BAA	Assembled in America, compliant with BAA (COTS)
MOUNT-ARD-ARM-SG	Mounting Arm Kit
SENSOR-BLE-619-L3/-L4*	Integral PIR Bluetooth Daylight Sensor (ALS Control Mobile App) / **L3:** up to 40FT **L4:** up to 20FT
SURGE-LSP4-U / H	10kV inline Surge Protection for Universal input / **U:** 120-277V, **H:** 480V input
CONTROL-LVFA*	AVI-ON Bluetooth Mesh Control System

*see page 6 for sensor spec

ARD-G2 SERIES ROADWAY

DIMENSIONS

Model	L	W	H1	H2
ARD-G2-101	21.62” (549mm)	8.11” (206mm)	5.34” (136mm)	4.06” (103mm)
ARD-G2-201	21” (534mm)	10.6” (269mm)	5.34” (136mm)	3.94” (100mm)
ARD-G2-301	30” (756mm)	12” (305mm)	5.34” (136mm)	3.94” (100mm)
MOUNT-ARM-ARD-SG	-	14.9” (378mm)	19.3” (490mm)	-

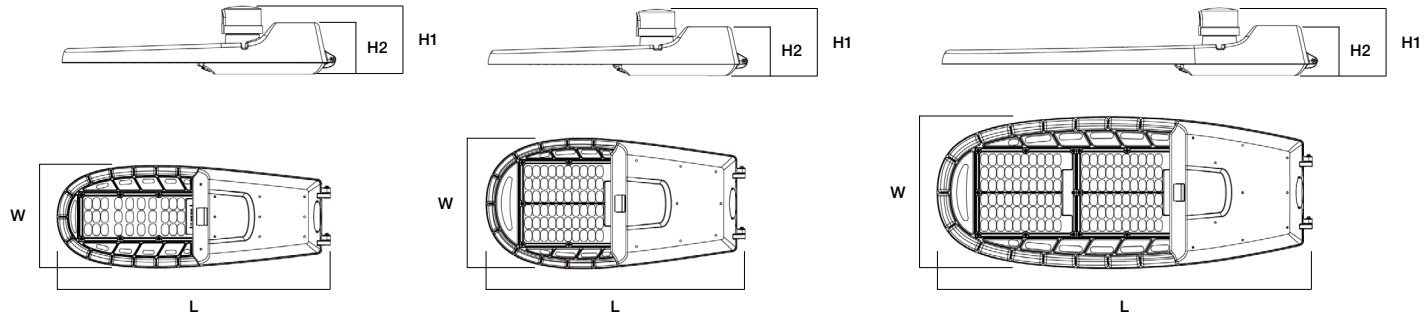

ARD-G2-101 ARD-G2-201 ARD-G2-301

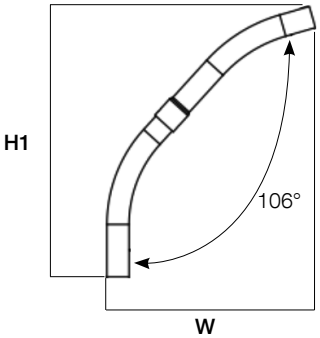

MOUNT-ARD-ARM
Mounting Arm Kit

OPTIONS

Twist-Lock Photocell
Standard 3-PIN NEMA Twist Lock

Wattage Selectable
All models have 4 wattage levels:
ARD-G2-75: 30W / 45W / 60W / 75W
ARD-G2-101: 41W / 61W / 81W / 101W
ARD-G2-160: 64W / 96W / 128W /160W
ARD-G2-201: 81W / 121W / 161W / 201W
ARD-G2-301: 121W / 181W / 241W / 301W

Optional Plug-N-Play Sensor
SENSOR-BLE-619

ARD-G2 SERIES ROADWAY

PERFORMANCE DATA

MODEL	SYSTEM WATTS	3000K		4000K		5000K		EPA
		LUMENS	LPW	LUMENS	LPW	LUMENS	LPW	
ARD-G2-101	41W	7100	173	7400	180	7400	180	0.4261
	61W	9900	162	10200	167	10200	167	0.4261
	81W	12500	154	12800	158	12800	158	0.4261
	101W	15000	149	15500	154	15500	154	0.4261
ARD-G2-201	81W	14000	173	14700	182	14700	182	0.5485
	121W	19700	163	20500	169	20500	169	0.5485
	161W	24500	152	25600	159	25600	159	0.5485
	201W	29800	148	31000	154	31000	154	0.5485
ARD-G2-301	121W	21000	174	21800	180	21800	180	0.7845
	181W	29700	164	30400	168	30400	168	0.7845
	241W	37000	154	37800	157	37800	157	0.7845
	301W	44500	148	46200	153	46200	153	0.7845

EPA (ft^2)

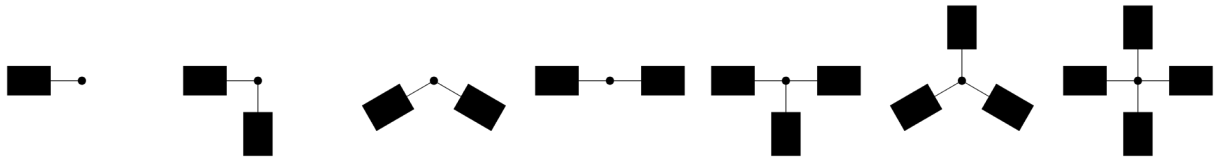

	Single	2 @ 90°	2 @ 120°	2 @ 180°	3 @ 90°	3 @ 120°	4 @ 90°
ARD-G2-101	0.426	0.724	0.948	0.852	1.150	1.247	1.150
ARD-G2-201	0.548	0.932	1.220	1.096	1.480	1.604	1.480
ARD-G2-301	0.784	1.333	1.745	1.568	2.117	2.294	2.117

Advantage Lighting Solutions® - All Rights Reserved

ARD-G2 SERIES ROADWAY

SENSOR SPEC

Model	Type	Mounting	Coverage	Input	Function	Programmable
SENSOR-BLE-619 (see page 7 for detail)	PIR	**L3** - 40FT **L4** - 20FT	30FT radius 30FT radius	12V DC	On/Off/Dimming	ALS Control Bluetooth Mobile App
CONTROL-LVFA (see page 8 for detail)	Fixture Controller	-	-	12V DC	Bluetooth Mesh On/Off/Dimming Scheduling	AVI-ON Bluetooth Mobile App

SENSOR-BLE-619

CONTROL-LVFA

ALS CONTROL

SENSOR-BLE-619 BLUETOOTH PIR SENSOR

Client:
Project:
Type:
Quantity:

FEATURE

- **Installation:** Factory Install - Sensor integral to fixture, lens external
- **Commissioning:** Wirelessly through ALS Control Mobile App (iOS / Android)
- **Certification:** DLC 5.1 Networked Lighting Control System
- **Control:** Hold time, High-Low setting, continuous Bi-level dimming, manual/auto - on/off
- **Sensor:** Motion (Occupancy/Vacancy/Manual) and Daylight
- **Zone Control:** Zoning and Grouping control, Scheduling

SPECIFICATIONS

SENSOR TYPE:	Passive Infrared Sensor (PIR)	**COMMISSIONING RANGE:**	50FT
WIRELESS STANDARDS:	Bluetooth SIG Mesh	**BLUETOOTH RANGE:**	Integral antenna up to 100FT
INPUT VOLTAGE:	12-24VDC, >50mA	**DETECTION ANGLE:**	Vertical 90° x Horizontal 360°
CONTROL OUTPUT:	0-10V	**MOUNTING HEIGHT:**	8 - 40FT
OPERATING TEMP:	-40°F ~ +158°F (-40°C ~ +70°C)	**WARRANTY:**	5 years
		IP RATING:	IP65

DIMENSIONS

BOTTOM VIEW

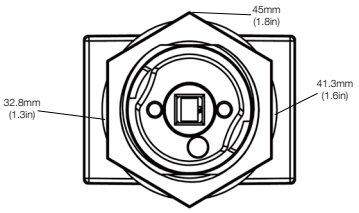

SIDE VIEW

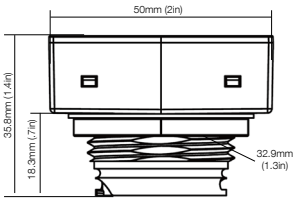

SIDE VIEW WITH DIPSWITCH

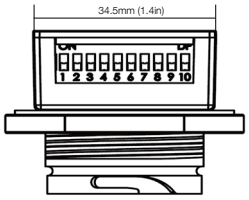

COVERAGE PATTERNS

SIDE VIEW (in feet)

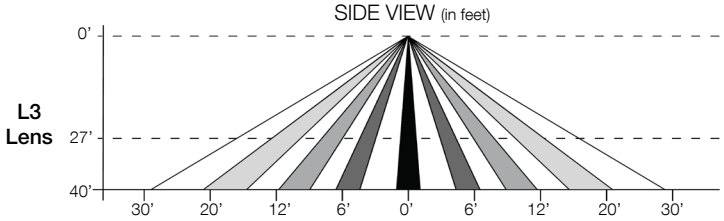

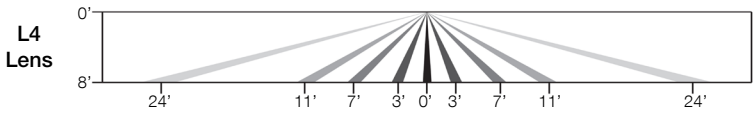

TOP VIEW (in feet)

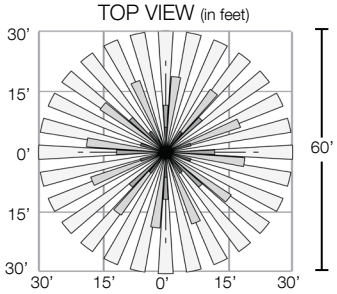

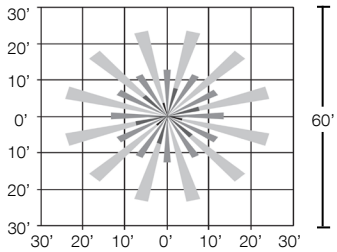

ORDER CODE — EXAMPLE: SENSOR-BLE-619-L3

A SERIES

SENSOR-BLE-619-L Integral PIR ALS Control Bluetooth Sensor 12VDC Input

B LENS

	Code	Mounting	Coverage
☐	**3**	40FT	30FT Radius
	4	20FT	30FT Radius

CONTROL-LVFA SPEC

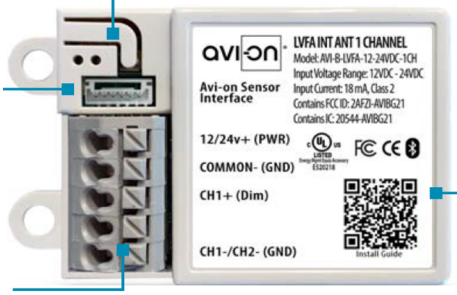

Status LEDs & Config Button
Quick and easy validation of wiring and network

Direct Connect™ Sensor Port
Simple and cost-effective addition to Avi-on sensors

Terminal Blocks & Mounting Tabs
Faster, easier and lower cost installation eliminating connectors

Internal Antenna
Improved performance and eliminates risk of accidentally cutting a hanging wire

SPECIFICATIONS

INPUT VOLTAGE:	12-24VDC
CURRENT:	15mA without a Sensor 19mA with a DC PIR Sensor 48mA with a DC Microwave Sensor
0-10V DIMMING:	12-24VDC
SIZE:	2.30in x 1.43in x 0.75in (58.2mm x 36.4mm x 19mm)
MOUNTING:	Removable mounting tabs
WEIGHT:	0.45 oz (16g)
OPERATING TEMP:	-22°F to +158°F (-30°C to + 70°C)

RADIO FREQUENCY:	2.4GHz
WIRELESS STANDARD:	BLE 4.2 with Mesh
POINT TO POINT RANGE*:	80ft with obstructions 350ft unobstructed
SECURITY:	AES 128-bit encryption for device to device communication AES 256-bit encryption for device to cloud communication
WARRANTY:	5 years; 10 years optional
REGULATORY:	FCC: 2AFZI-AVI1010 B IC: 20544-AVI1010 B BQB: D031801, DID: 86303 UL 916, 2043 (Plenum Rated)

*When communicating through the mesh, range is essentially unlimited (5000ft+)

WIRING DIAGRAM

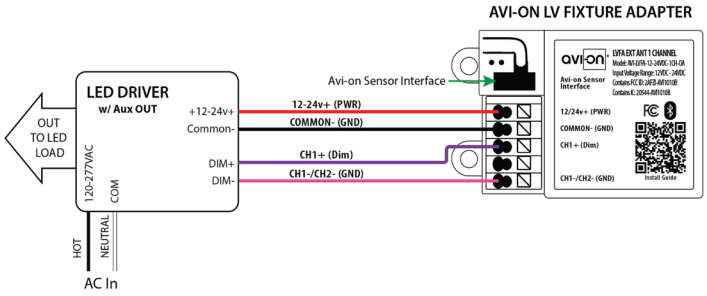

Fixture adapter powered by LED driver auxiliary output

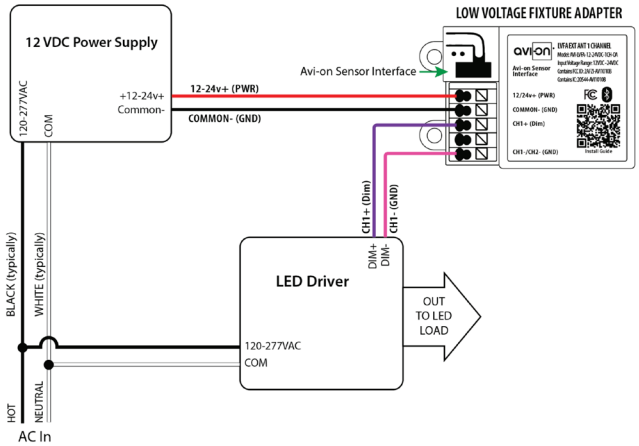

Fixture adapter connected to LED driver and using power supply