Client:
Project:
Type:
Quantity:

VTNSF SERIES NSF CERTIFIED VAPOR TIGHT LINEAR

CONSTRUCTION
Polycarbonate material housing, compact design with stainless steel latches. 3/4" knockout back and end of housing for end mount sensor, through wiring or surface conduit mount.

OPTICS
Frosted polycarbonate lens offers edge to edge smooth illumination for maximum visual comfort.

ELECTRICAL
Delivered average 160lm/W efficacy LEDs offer 80+ color rendering index (CRI).
Field Selectable Output and CCT (see ordering information for detail).
L70 >100,000 hours expected life.
-40°C up to 50°C (-40°F up to 122°F) maximum operating temperature.
Driver operates at 120-277V Input, Dim-to-Off 0-10V driver, 12V AUX Output.
Surge protection: L-N: 6kV; L/N-GND: 6kV.
Over temperature protection.

MOUNTING
Designed for direct wire or as a portable luminaire with use of power cord.*
Standard surface mountable underneath electrical box, or surface conduit mount through 3/4" knockout.
*Power-cord - optional add-on.

SENSORS (OPTIONAL)
SENSOR-819W-O1 End mount on/off motion sensor highbay lens (Wet).
SENSOR-819W-D1 End mount programmable motion and photocell sensor highbay lens (Wet).
SENSOR-BLE-819W-L1 End mount ALS CONTROL Bluetooth on/off motion sensor lowbay lens (Wet).
CONTROL-LVFA AVI-ON Bluetooth Mesh Controller.
SENSOR-PH-PB-U Integral Button Style Photocell.

STANDARD FINISH
White finish standard, IP66 for wet location.

CERTIFICATION
IK10 Impact Rated.
National Sanitation Foundation Certified & Listed.
IP66 Wet location label standard.
Meets Buy America Act requirements.
All luminaires are built to UL1598 standards and bear appropriate cULus labels.
For Emergency application, equipment with UL924 certified battery packs.
DLC® Premium (DesignLights Consortium Qualified).

WARRANTY
5 year warranty, see Limited Warranty for additional information.

VTNSF SERIES NSF CERTIFIED VAPOR TIGHT LINEAR

ORDER INFORMATION

EXAMPLE: VTNSF 200 SC WH UD

Fixture	Series	Power & LM	CCT	Finish	Input
	VTNSF		SC	GR	UD
Accessories Options					

A SERIES

VTNSF	NSF Certified Vapor Tight Linear Field Selectable Output & CCT

B POWER & LM

Code	Size	Power	LM
135	4-Foot	Field Selectable 100W / 115W / 135W	16,153 / 18,378 / 21,280lm
200	4-Foot	Field Selectable 155W / 185W / 200W	25,704 / 30,240 / 32,256lm

C CCT

MC	Field Selectable 3500K / 4000K / 5000K

D FINISH

WH	White

E INPUT

UD	120-277V Input, 0-10V Dim-to-Off

F ACCESSORIES/OPTIONS

BAA	Assembled in America, Compliant with BAA (COTS)
MOUNT-VTNSF-HOOK	V Hook Mount - Chain Provided by Others
EMB-18W-B*	90-Minute Self-Diagnostic Emergency Battery 18W 100-347VAC Input 170VDC Output
EMB-18W-C-B*	90-Minute Self-Diagnostic Emergency Battery 18W 100-347VAC Input 170VDC Output -20°C-50°C (-4°F-122°F)
REMOTE-RC100	Handheld Remote Commissioning Tool for SENSOR-819-D1/D2 Only
SENSOR-819W-O1*	End mount on/off motion sensor lowbay lens (Wet)
SENSOR-819W-D1*	End mount on/off/dimming and photocell sensor lowbay lens (Wet)
SENSOR-BLE-819W-L1*	End Mount PIR Bluetooth Daylight Harvesting Sensor (ALS Control Mobile App) / **L1:** up to 20FT (Wet)
SENSOR-PH-PB-U*	Button Style Photocell
CONTROL-LVFA*	AVI-ON Bluetooth Mesh Control System
SURGE-LSP4-U	10kV Surge Protector
-PLUG	6-Foot Black Cord and Plug (3-Prong)
-CORD	18-3 300V 6 Foot Cord
TWIST-LOCK	Specify Plug Type: **L515P** / **L715P** / **HBL5929** / **L8-20P**

*see page 4 for sensor spec

**see page 5 for emb spec

VTNSF SERIES NSF CERTIFIED VAPOR TIGHT LINEAR

DIMENSIONS

Model	L	W	H
VTNSF	47.5” (1206mm)	10.5” (266mm)	4.5” (115mm)

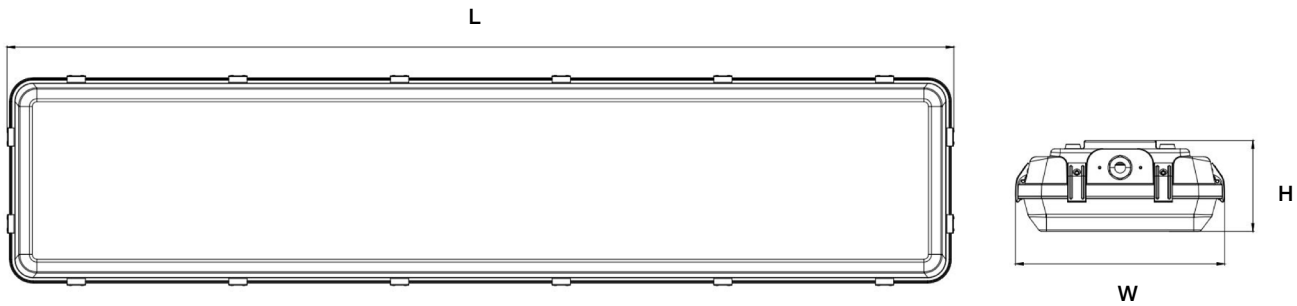

PERFORMANCE DATA

MODEL	SYSTEM WATTS	VOLTAGE	3500K		4000K		5000K	
			LUMENS	LPW	LUMENS	LPW	LUMENS	LPW
VTNSF-135-MC	100W	120-277V	15,775	164	15,932	173	16,153	166
	115W	120-277V	17,947	163	18,127	171	18,378	164
	135W	120-277V	20,781	160	20,989	169	21,280	162
VTNSF-200-MC	155W	120-277V	25,101	165	24,352	174	25,704	167
	185W	120-277V	29,531	163	29,826	171	30,240	165
	200W	120-277V	31,500	161	31,815	169	32,256	162

DLC CODE

Part Number	DLC Product ID	DLC Class
VTNSF-135MC-WHUD	S-LRHM0N	Premium 6.0
VTNSF-200MC-WHUD	S-TB3645	Premium 6.0

VTNSF SERIES NSF CERTIFIED VAPOR TIGHT LINEAR

SENSOR SPEC

Model	Type	Mounting	Coverage	Input	Function	Programmable
SENSOR-819W-O2	PIR	40FT	30FT radius	Universal	On/Off	-
SENSOR-819W-D2	PIR	40FT	30FT radius	Universal	On/Off/Dimming	REMOTE-RC100
SENSOR-BLE-819W (see page 7 for detail)	PIR	**L1** - 20FT	30FT radius	Universal	Bluetooth Mesh On/Off/Dimming Daylight Harvesting	ALS Control Bluetooth Mobile App
CONTROL-LVFA (see page 6 for detail)	Fixture Controller	-	-	12V DC	Bluetooth Mesh On/Off/Dimming Scheduling	AVI-ON Bluetooth Mobile App
SENSOR-PH-PB-U	-	-	-	Universal	Dusk-to-Dawn Control	-

SENSOR-819W-XX
SENSOR-BLE-819W

CONTROL-LVFA

SENSOR-PH-PB-U

VTNSF SERIES NSF CERTIFIED VAPOR TIGHT LINEAR

EMB SPEC

Model	Battery Capacity	Input	Output	Output Power	Operating Temp	Installation
EMB-18W-B	90mins	100-347VAC	170VDC	18w	0°C ~ 50°C 32°F ~ 122°F	Factory or Field Install
EMB-18W-C-B	90mins	100-347VAC	170VDC	18w	-20°C ~ 50°C -4°F ~ 122°F	Factory or Field Install

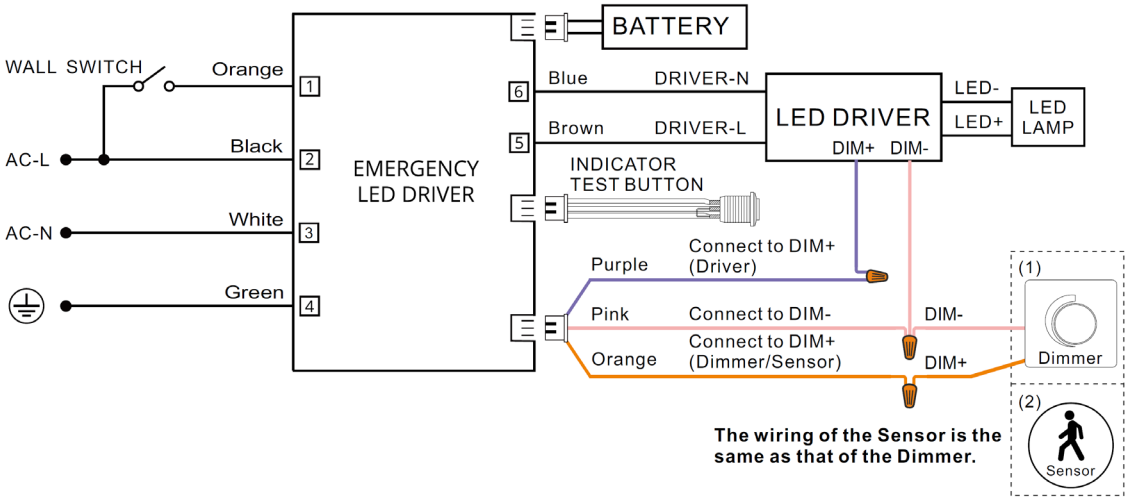

VTNSF SERIES NSF CERTIFIED VAPOR TIGHT LINEAR

CONTROL-LVFA SPEC

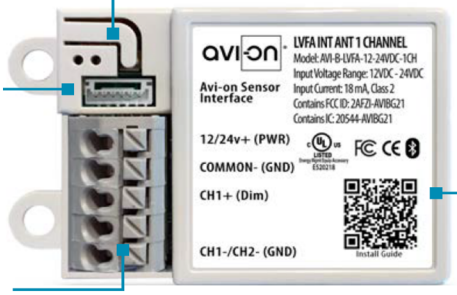

Status LEDs & Config Button
Quick and easy validation of wiring and network

Direct Connect™ Sensor Port
Simple and cost-effective addition to Avi-on sensors

Terminal Blocks & Mounting Tabs
Faster, easier and lower cost installation eliminating connectors

Internal Antenna
Improved performance and eliminates risk of accidentally cutting a hanging wire

SPECIFICATIONS

INPUT VOLTAGE:	12-24VDC
CURRENT:	15mA without a Sensor 19mA with a DC PIR Sensor 48mA with a DC Microwave Sensor
0-10V DIMMING:	12-24VDC
SIZE:	2.30in x 1.43in x 0.75in (58.2mm x 36.4mm x 19mm)
MOUNTING:	Removable mounting tabs
WEIGHT:	0.45 oz (16g)
OPERATING TEMP:	-22°F to +158°F (-30°C to + 70°C)

RADIO FREQUENCY:	2.4GHz
WIRELESS STANDARD:	BLE 4.2 with Mesh
POINT TO POINT RANGE*:	80ft with obstructions 350ft unobstructed
SECURITY:	AES 128-bit encryption for device to device communication AES 256-bit encryption for device to cloud communication
WARRANTY:	5 years; 10 years optional
REGULATORY:	FCC: 2AFZI-AVI1010 B IC: 20544-AVI1010 B BQB: D031801, DID: 86303 UL 916, 2043 (Plenum Rated)

*When communicating through the mesh, range is essentially unlimited (5000ft+)

WIRING DIAGRAM

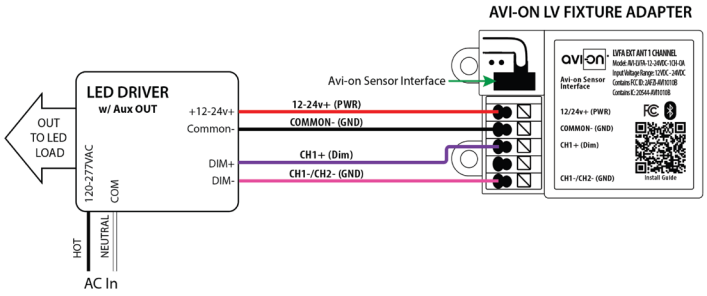

Fixture adapter powered by LED driver auxiliary output

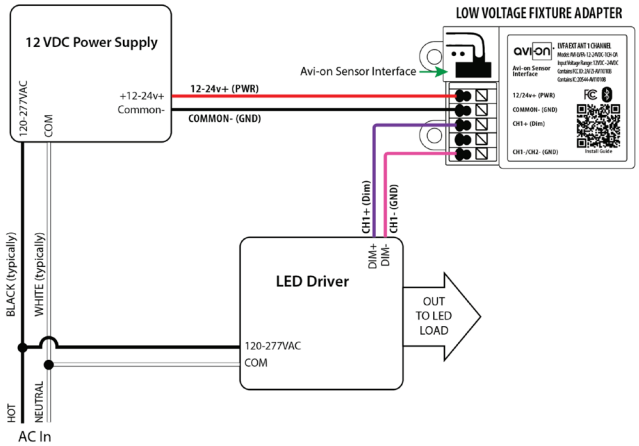

Fixture adapter connected to LED driver and using power supply

ALS CONTROL

SENSOR-BLE-819W BLUETOOTH PIR SENSOR

Client:
Project:
Type:
Quantity:

FEATURE

- **Installation:** Factory or Field Install End Mount to Fixture
- **Commissioning:** Wirelessly through ALS Control Mobile App (iOS / Android)
- **Certification:** DLC 5.1 Networked Lighting Control System
- **Control:** Hold time, High-Low setting, continuous Bi-level dimming, Code-compliant manual-on or auto-off capability
- **Sensor:** Motion (Occupancy/Vacancy/Manual) and Daylight Harvesting
- **Room and Zone Control:** Zoning and Grouping control, Scheduling

SPECIFICATIONS

SENSOR TYPE:	Passive Infrared Sensor (PIR)
WIRELESS STANDARDS:	Bluetooth SIG Mesh
INPUT VOLTAGE:	120/277VAC
CONTROL OUTPUT:	0-10V
OPERATING TEMP:	-40°F ~ +167°F (-40°C ~ +75°C)
COMMISSIONING RANGE:	50FT
BLUETOOTH RANGE:	Intergral antenna up to 100FT
DETECTION ANGLE:	Vertical 90° x Horizontal 360°
MOUNTING HEIGHT:	8 - 40FT
WARRANTY:	5 years
IP RATING:	IP65 Wet

DIMENSIONS

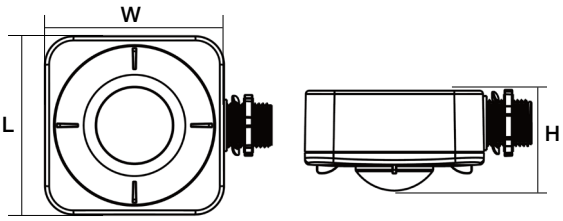

L	W	H
3.19” (81mm)	4.02” (102mm)	1.70” (43.3mm)
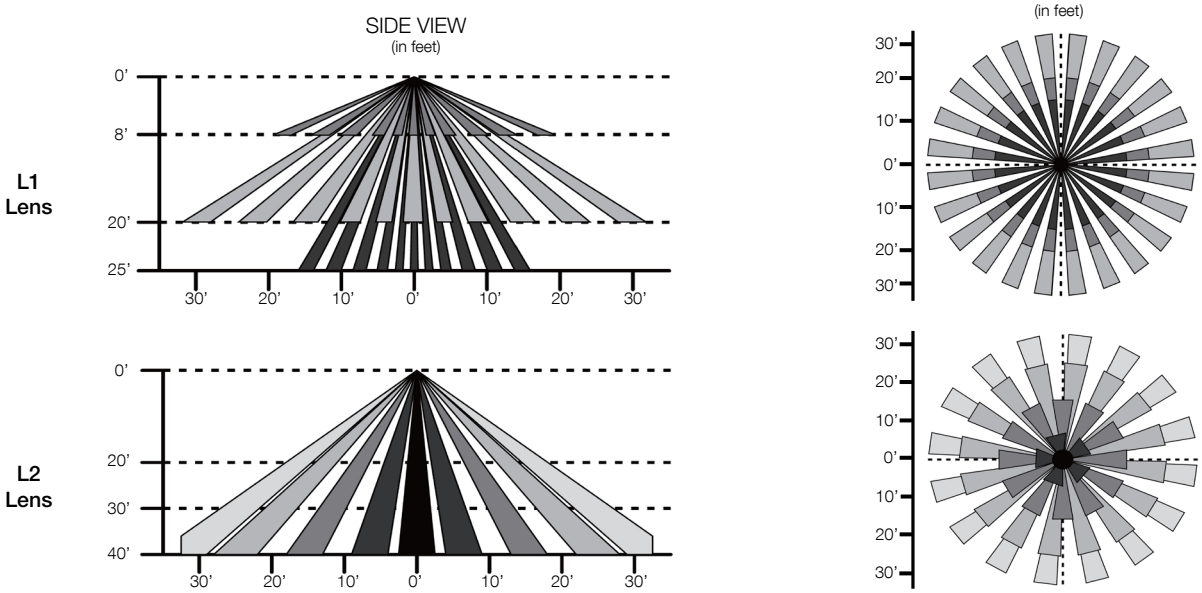
COVERAGE PATTERNS