Client:
Project:
Type:
Quantity:

CONTRACTOR SERIES AREA LIGHT

CONSTRUCTION

Rugged one-piece die-cast aluminum housing and polycarbonate lens for durability.
Casting thermally conducts LED heat to optimize performance and lifespan.
LED housing is hermetically sealed against moisture and contaminants.

CSA-200

OPTICS

UV-resistant polycarbonate optics, available in Type III distributions.
Optics is precisely designed to shape the distribution, maximizing efficiency and application spacing.

ELECTRICAL

80+ CRI LED.
-40°C up to 40°C (-40°F up to 104°F) maximum operating temperature.
Long-life 100,000 hr LED at L70 @ 25°C.
Selectable wattage from 80 ~ 300W; selectable CCT available from 3000K ~ 5000K.
Driver operates at 120-277V input, 0-10V dimmable driver, down to 10%.
Built-in photocell included.
50/60Hz, <15% THD, 0.9 power factor.

CSA-300

SENSORS (OPTIONAL)

SENSOR-ANT-6-4R Plug-N-Play PIR On/Off/Dimming/Photosensing.
SENSOR-BLE-6-4R Plug-N-Play PIR Bluetooth/On/Off/Dimming/Photosensing.

MOUNTING

Adjustable square / round pole mount bracket (SRT).
Optional adjustable slipfitter (SF) for 2-3/8" tenon.
Optional yoke mount bracket (YM) for surface mount.

STANDARD FINISH

Dark Bronze powder coating finish.

CERTIFICATION

Meets Buy America Act requirements.
Wet location label standard.
IDA Compliant: with 3000K color temperature selection.
All luminaires are built to UL1598 standards and bear appropriate cULus labels.

WARRANTY

5 year warranty, see Limited Warranty for additional information.

ALS®
Advantage Lighting Solutions

CONTRACTOR SERIES AREA LIGHT

ORDER INFORMATION

EXAMPLE: CSA 200SC T3 DB UNVD-P

Fixture	Series	Power & LM	Distribution	Finish	Input
	CSA		T3		UNVD-P
Mounting			Accessories Option		

A SERIES

CSA	Contractor Series - Area Light

B POWER & LM

Code	Power	CCT	LM
200SC	Field Selectable 80 / 120 / 160 / 200W	Field Selectable 3000K / 4000K / 5000K	13,200 ~ 26,760lm
300SC	Field Selectable 120 / 180 / 240 / 300W	Field Selectable 3000K / 4000K / 5000K	19,560 ~ 44,000lm

C DISTRIBUTION

T3	Type III

D FINISH

DB	Dark Bronze
BK	Black
WH	White

E INPUT

UNVD-P	120-277V, 0-10V Dimming with Photocell

F MOUNTING

MOUNT-CSA-SF	Adjustable Slipfitter Bracket for 2-3/8” Tenon
MOUNT-CSA-SRT	Tiltable Square and Round Pole Bracket
MOUNT-CSA-YM	Adjustable Yoke Mount Bracket

G ACCESSORIES/OPTIONS

BAA	Assembled in America, compliant with BAA (COTS)
SENSOR-ANT-6-4R*	Plug-N-Play PIR On/Off/Dimming/Photosensing
SENSOR-BLE-6-4R*	Plug-N-Play PIR Bluetooth On/Off/Dimming/Photosensing
REMOTE-RC100*	Handheld Remote Commissioning Tool for SENSOR-ANT / SENSOR-BLE (1 per job)

*see page 5 for sensor spec.

DIMENSIONS

Model	L	W	H
CSA-200	19.86” (505mm)	9.25” (235mm)	2” (51mm)
CSA-300	23.48” (597mm)	10.39” (264mm)	2.36” (60mm)

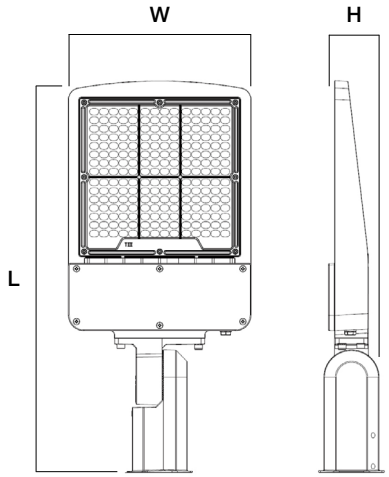

CSA-200

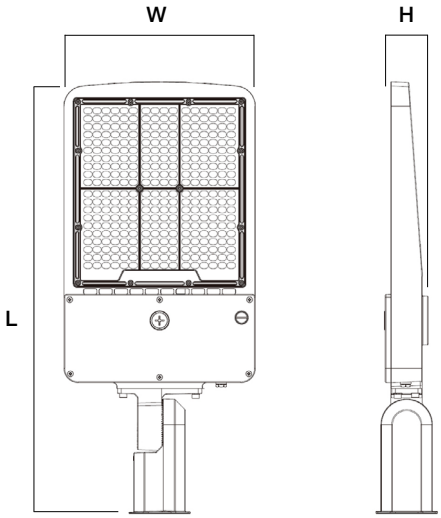

CSA-300

EPA (ft²)

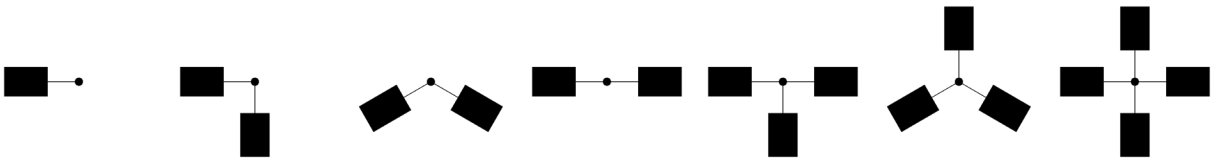

Mounting Option	Single	2 @ 90°	2 @ 120°	2 @ 180°	3 @ 90°	3 @ 120°	4 @ 90°
200W	0.253	0.459	0.562	0.506	0.712	0.768	0.712
300W	0.309	0.532	0.658	0.618	0.841	0.881	0.841

PERFORMANCE DATA

MODEL	SYSTEM WATTS	VOLTAGE	LUMENS	EFFICACY
CSA-200	80W	120-277V	13200	165
	120W	120-277V	19200	160
	160W	120-277V	24800	155
	200W	120-277V	26760	134
CSA-300	120W	120-277V	19560	163
	180W	120-277V	28440	158
	240W	120-277V	36700	153
	300W	120-277V	44400	148

Advantage Lighting Solutions® - All Rights Reserved

SENSOR SPEC

Model	Type	Mounting	Coverage	Input	Function	Programmable
Integrated Photocell	-	-	-	Universal 120-270V	Dusk-to-Dawn Control	-
SENSOR-ANT-6-4R (see page 6 for detail)	PIR	up to 40FT	30FT radius	12V DC ~ 24 V DC	On/Off/Dimming	REMOTE-RC100
SENSOR-BLE-6-4R (see page 7 for detail)	PIR	up to 40FT	30FT radius	12V DC ~ 24 V DC	On/Off/Dimming	ALS Control Bluetooth Mobile App

Integrated Photocell

SENSOR-ANT-6-4R
SENSOR-BLE-6-4R

ALS CONTROL

SENSOR-ANT-6-4R PIR SENSOR

Client:
Project:
Type:
Quantity:

FEATURE

- **Installation:** Plug-N-Play via AUX Socket on Attached Fixture
- **Commissioning:** through RC100 Remote Control
- **Control:** Hold time, High-Low setting, Continuous Bi-Level Dimming, Code-Compliant Manual-On or Auto-Off Capability
- **Sensor:** Motion (Occupancy/Vacancy/Manual) and Daylight Harvesting
- **Factory Default:** 100% Sensitivity / Hold on Time: 5mins / Daylight Sensor is ☼ / Dimming Level: 30% / Dimming Time: 60mins

SPECIFICATIONS

SENSOR TYPE:	Passive Infrared Sensor (PIR)
STANDARD OPTION:	SENSOR-ANT-6-4R
INPUT VOLTAGE:	12-24VDC, >30mA
LIGHT CONTROL:	24H / 10 ~ 50LUX
CONTROL OUTPUT:	0-10V
OPERATING TEMP:	-4°F ~ +140°F (-20°C ~ +60°C)
COMMISSIONING RANGE:	50FT from Remote Control
TIME SETTING:	10sec ~ 60min (adjustable)
DETECTION ANGLE:	360°
MOUNTING HEIGHT:	Up to 40FT.
WARRANTY:	5 years
IP RATING:	IP65

DIMENSIONS

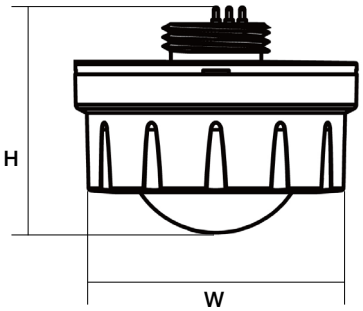

H	W
1.76” (44.7mm)	2.15” (54.5mm)

COVERAGE PATTERNS

SIDE VIEW
(in feet)

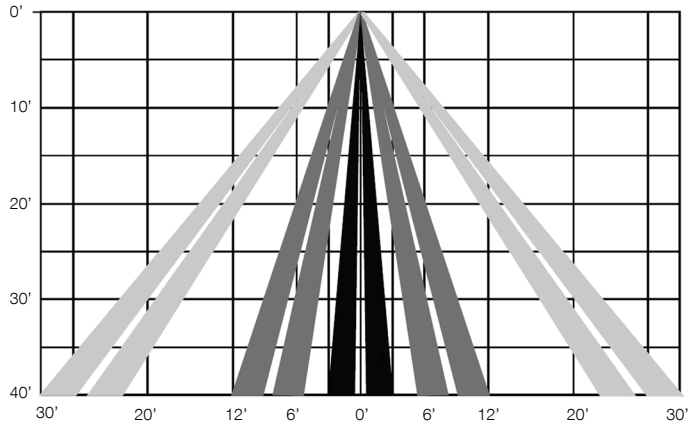

TOP VIEW
(in feet)

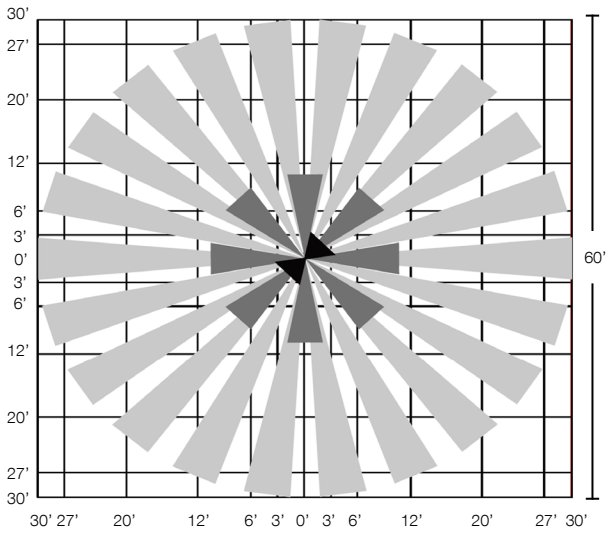

ORDER CODES

SENSOR-ANT-6-4R Plug-N-Play PIR On/Off/Dimming/Photosensing

c UL us LISTED

Quick Ship

ALS CONTROL

SENSOR-BLE-6-4R BLUETOOTH PIR SENSOR

Client:
Project:
Type:
Quantity:

FEATURE

- **Installation:** Plug-N-Play via AUX Socket on Attached Fixture
- **Commissioning:** Wirelessly through ALS Control Mobile App (iOS / Android)
- **Control:** Hold time, High-Low setting, Continuous Bi-Level Dimming, Code-Compliant Manual-On or Auto-Off Capability
- **Sensor:** Motion (Occupancy/Vacancy/Manual) and Daylight Harvesting
- **Factory Default:** 100% Sensitivity / Hold on Time: 5mins / Daylight Sensor is ☼ / Dimming Level: 30% / Dimming Time: 60mins

SPECIFICATIONS

SENSOR TYPE:	Passive Infrared Sensor (PIR)
STANDARD OPTION:	SENSOR-ANT-6-4R
INPUT VOLTAGE:	12-24VDC, >30mA
LIGHT CONTROL:	24H / 10 ~ 50LUX
CONTROL OUTPUT:	0-10V
OPERATING TEMP:	-4°F ~ +140°F (-20°C ~ +60°C)
COMMISSIONING RANGE:	50FT
TIME SETTING:	10sec ~ 60min (adjustable)
DETECTION ANGLE:	360°
MOUNTING HEIGHT:	Up to 40FT.
WARRANTY:	5 years
IP RATING:	IP65

DIMENSIONS

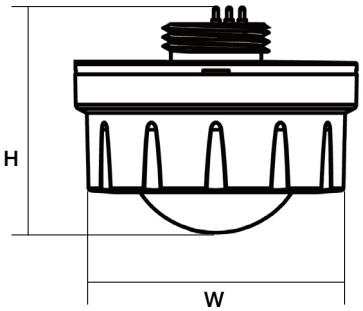

H	W
1.76” (44.7mm)	2.15” (54.5mm)

COVERAGE PATTERNS

SIDE VIEW
(in feet)

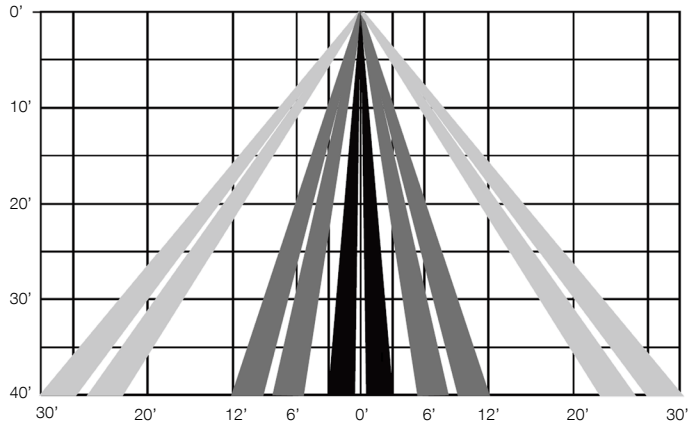

TOP VIEW
(in feet)

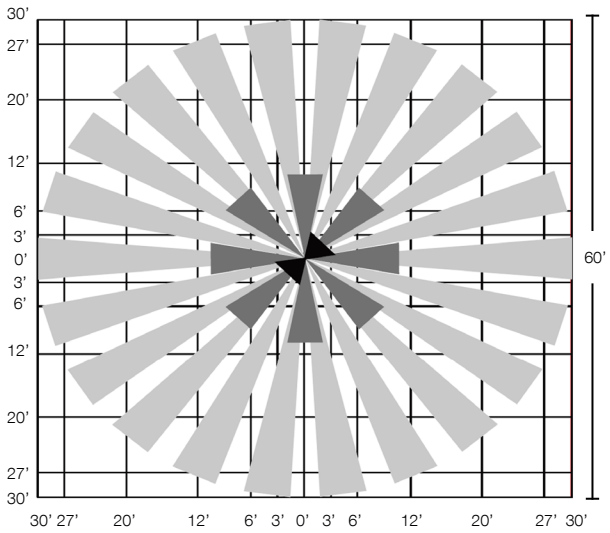

ORDER CODES

SENSOR-BLE-6-4R Plug-N-Play PIR Blueooth/On/Off/Dimming/Photosensing

c UL us LISTED

Quick Ship

ALS CONTROL

REMOTE-RC100 SENSOR REMOTE PROGRAMMER

Client:
Project:
Type:
Quantity:

FEATURE

The Remote control wireless IR configuration tool is a handheld tool for remote configuration of IR-enabled fixture integrated sensors. The tool enables device to modify via push button and stores up to four sensor parameter modes to speed configuration of multiple sensors.

	PROGRAMMABLE	RESET
COMPATIBLE SENSORS	SENSOR-ANT-6-4R SENSOR-ANT-6-4T SENSOR-ANT-6-4T-EM SENSOR-ANT-6-4T-H SENSOR-ANT-6-4T-H-EM SENSOR-ANT-7 SENSOR-ANT-3C-B1 SENSOR-819-D1/D2 SENSOR-823 SENSOR-820	SENSOR-BLE-6-4R SENSOR-BLE-6-4T SENSOR-BLE-7 SENSOR-BLE-7D SENSOR-BLE-819 SENSOR-BLE-619 CONTROL-BLE-5-4T WALLSWITCH-BLE-101 WALLSWITCH-BLE-204

Dimension

L - 4.84” (123mm)
W - 2.76” (70mm)
H - .80” (20.3mm) Thickness

SPECIFICATION

Carrying Case
RC-100 in Carrying Case

Commissioning Range
Up to 50FT (15mm)

Operating Temp
32F ~ 122F (0°C ~ 50°C)

Power
2 x AAA 1.5V Akaline batteries

BRIGHTNESS
Set output level (in 70%, 80%, 90%, or 100%) of connected lighting during occupancy.

SENSITIVITY
Set the sensitivity (in 20%, 50%, 75%, or 100%) of the occupancy sensor.

HOLD TIME
Set the time (in 10s, 1m, 5m, 10m, 16m, 20m, 30m, or 60m) that the fixture will hold at normal output after the space is vacant.

DAYLIGHT SENSOR
Set the threshold of natural light (in 10, 30, or 50) as setpoint to light on automatically for the sensor. If natural light is above the selected threshold, fixture will shut off Set daylight (in 100, 300, 500) as setpoint to light off.

STAND-BY DIM/TIME
DIM: Set the output level (in 0%, 10%, 30%, or 50%) of the fixture during vacancy. This will only take place after Hold Time has elapsed.

TIME: Set the time (+∞, 1m, 30m, or 50m) that the sensor will remain in stand-by mode before powering down.

ON/OFF
Use this to manually power a fixture on or off.

AUTO
Press Auto to engage/unlock a sensor.
Press Auto, then press Display to show the sensors current setting parameters.

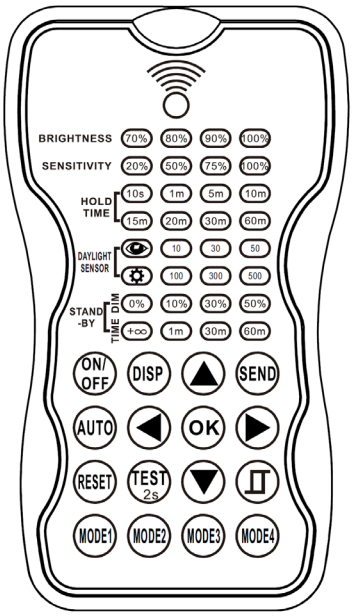

DISPLAY
Press to Display to view current setting parameters for each function. LED indicators will highlight current settings.

DIRECTIONAL ARROWS
Use the arrows to navigate the setting options by pressing up/down or left/right.

SEND
Press Send to upload displayed settings to individual sensor/fixture. The fixture will blink on and off to confirm new settings.

SMART DAYLIGHT SENSOR
Open and or close smart daylight sensor.
Press up/down arrows buttons to enter setting condition, the parameters LEDs of remote control will flash to be selected.

TEST
Used to test sensitivity of occupancy sensing.
Press Test, then the fixture will enter Test Mode, where Hold Time is only 2s.
While Test Mode is active, Stand-By and Daylight sensing will be disabled.
Press Auto to exit Test Mode.

RESET
Press Reset to put all parameters back to default settings.

MODE
Press the Mode # that you want to save.
Use Directional Arrows to select new parameters.
Press OK to confirm.

Advantage Lighting Solutions® - All Rights Reserved