Client:
Project:
Type:
Quantity:

LPAW WET LOCATION SELECTABLE BACKLIT PANEL

CONSTRUCTION

Low profile panel construction with a durable white finish for long-lasting performance. Designed for recessed ceiling installation with compatibility for suspension mounting using optional accessories. Suitable for wet locations with full-body IP65-rated enclosure.

OPTICS

Backlit design provides exceptional lighting distribution. Frosted polystyrene lens offers edge to edge illumination without pixilation or bright spots.

ELECTRICAL

80+ CRI.
Long-life, high-efficacy, micro-power LEDs, illumination for extended service life. Greater than 70% LED lumen maintenance at 100,000 hours (L70>100,000).
Selectable lumen and CCT technology allows easy field-adjustable capability,
Special made 90CRI LED, consult factory.
Driver operates at 120-277V input, 0-10V dimmable driver.

MOUNTING

Designed to accommodate lay-in ceilings, Slot T, and T-bar suspension system for 5/8" and 3/8" width. Built-in earthquake clips come standard.
Surface/cable mount applications, use surface/cable kit accessories.
Plaster or sheetrock installations, select flange kit.
Hard ceiling application, select hard ceiling kit.

SENSORS (OPTIONAL)

SENSOR-BLE-7 Integral Microwave Bluetooth Wireless Motion/on/off/dimming/photosensing.
SENSOR-ANT-7 Integral Mircowave Motion/on/off/dimming/photosensing.
CONTROL-LVFA AVI-ON Bluetooth Mesh Controller.
CONTROL-BLE-620 Bluetooth Wireless Fixture Controller for CCT Tuning, Dimming, Grouping, Scheduling Features (ALS Control Mobile App)

STANDARD FINISH

90% minimum average reflective white polyester powder coat bonded to phosphate-free, multi-stage pretreated metal. All parts painted after fabrication to facilitate installation, increase efficiency, and inhibit corrosion.

CERTIFICATION

IP65 Wet Rated.
Meets Buy America Act requirements.
RoHS Compliant.
All luminaires are built to UL1598 standards and bear appropriate cULus labels.
For Emergency application, equipment with UL924 certified battery packs.
DLC® Standard (DesignLights Consortium Listed)

WARRANTY

5 year warranty, see Limited Warranty for additional information.

LPAW WET LOCATION SELECTABLE BACKLIT PANEL

ORDER INFORMATION

EXAMPLE: LPAW 2 MC BACKLIT

	Series	Model	Finish	Input
Fixture	**LPAW**		**WH**	
Mounting				
Accessories Options				

A SERIES

LPAW	Selectable Lumen and CCT Panel, IP65 Wet Rated

B MODEL

Code	Size	Power	CCT	lm/W (avg.)
2-MC-BACKLIT	2x2	14W / 22W / 30W	Field Selectable 3500K / 4000K / 5000K	135lm/W
4-MC-BACKLIT	2x4	28W / 36W / 44W	Field Selectable 3500K / 4000K / 5000K	135lm/W

C FINISH

WH	White

D INPUT

blank	120-277V, 10% 0-10V Dimming w/12V AUX Output	**UD1%**	120-277V, 1% 0-10V Dimming w/12V AUX Output

E MOUNTING

blank	Standard lay-in
MOUNT-LP-22-FGK	1.52” Tall 2x2 Flange Kit (Plaster, Sheetrock or Drywall)
MOUNT-LP-24-FGK	1.52” Tall 2x4 Flange Kit (Plaster, Sheetrock or Drywall)
MOUNT-LP-22-SMK	4” Tall 2x2 Surface Mount Kit for LPA backlit
MOUNT-LP-24-SMK	4” Tall 2x4 Surface Mount Kit for LPA backlit
MOUNT-LP-PMK	Aircraft Cable Pendant Mount

F ACCESSORIES/OPTIONS

BAA	Assembled in America, compliant with BAA (COTS)
-C	3/8” x 6FT Steel Flex 5-18AWG Solid 6’ leads BLK/WH/GRN/PUR/PNK & 3/8” Die Cast Screw-In Locknut Connectors
EMB-H08170*	90-Minute Self-Diagnostic Emergency Battery 8W 100-347VAC Input 170VDC Output
EMB-H18170*	90-Minute Self-Diagnostic Emergency Battery 18W 100-347VAC Input 170VDC Output
GTD-ESRLUD**	Emergency Battery Generator Transfer Device 120-277 VAC Input
SENSOR-BLE-7*	Integral Microwave Bluetooth Wireless Bi-Level Motion Sensor (ALS Control Mobile App)
SENSOR-ANT-7*	Integral Microwave Bi-Level Motion Sensor
CONTROL-LVFA*	AVI-ON Bluetooth Mesh Control System
CONTROL-BLE-620	Bluetooth Wireless Fixture Controller for CCT Tuning, Dimming, Grouping, Scheduling Features (ALS Control Mobile App)
REMOTE-RC100	Handheld Remote Commissioning Tool for SENSOR-ANT (1 per job)

*see page 5 for sensor and emb spec

**see page 10~11 for GTD spec

LPAW WET LOCATION SELECTABLE BACKLIT PANEL

DIMENSIONS

Model	L	W	D
LPAW-2-MC-BACKLIT	23.70” (603mm)	23.70” (603mm)	1.40” (35mm)
LPAW-4-MC-BACKLIT	47.80” (1213mm)	23.70” (603mm)	1.40” (35mm)

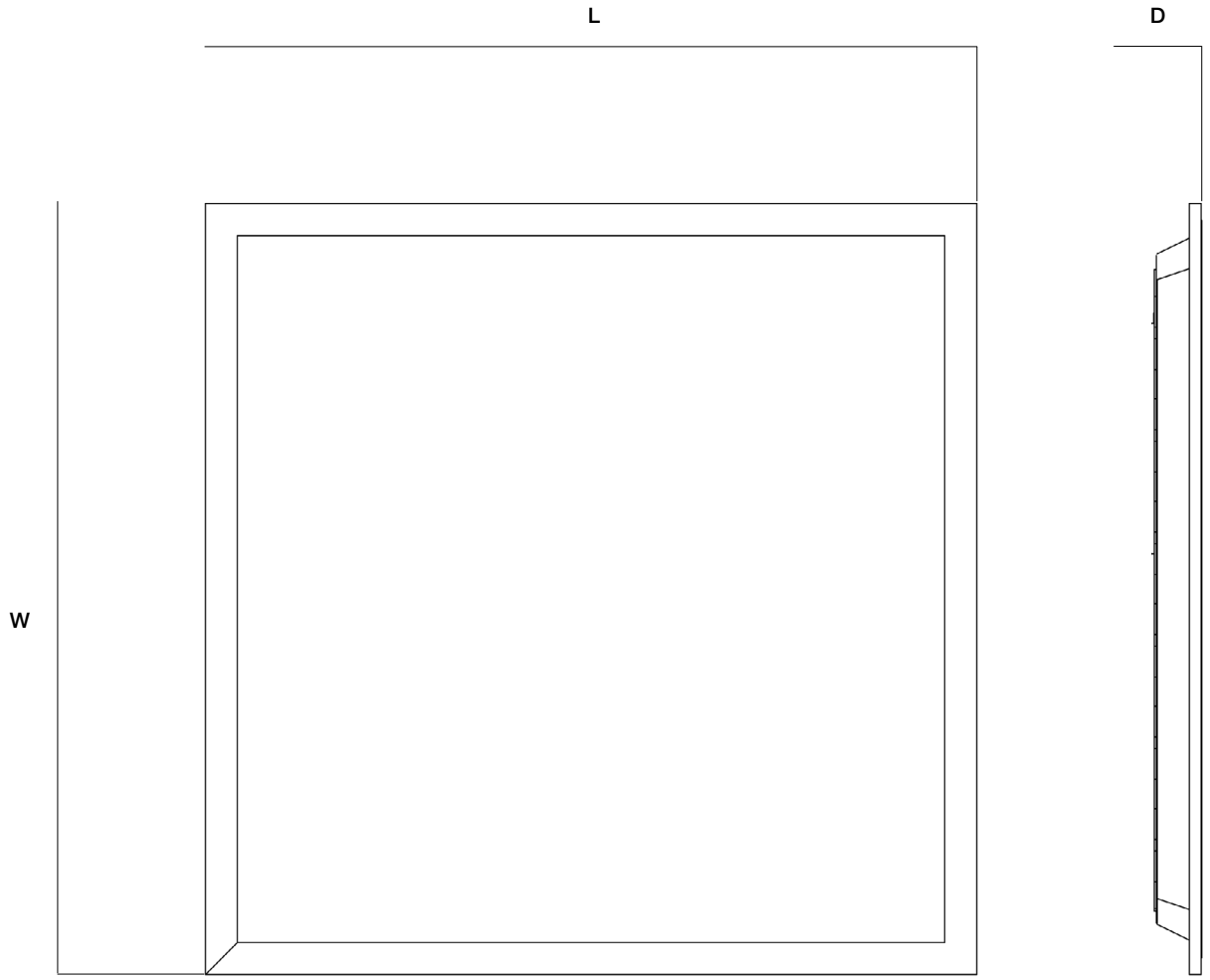

LPAW WET LOCATION SELECTABLE BACKLIT PANEL

PERFORMANCE DATA - LPAW

MODEL	SYSTEM WATTS	VOLTAGE	LUMENS	EFFICACY
LPAW-2-MC-BACKLIT (2x2)	14W	120-277V	2000	135
	22W	120-277V	3000	
	30W	120-277V	4000	
LPAW-4-MC-BACKLIT (2x4)	28W	120-277V	4000	135
	36W	120-277V	5000	
	44W	120-277V	6000	

DLC CODE

Part Number	DLC Product ID	DLC Class
LPAW-2-WHUD (2x2)	S-X5FMMW	Premium 6.0
LPAW-4-WHUD (2x4)	S-L8G712	Premium 6.0

LPAW WET LOCATION SELECTABLE BACKLIT PANEL

SENSOR SPEC

Model	Type	Mounting	Coverage	Input	Function	Programmable
CONTROL-LVFA (see page 6 for detail)	-	-	-	12V DC	Bluetooth Mesh On/Off/Dimming Scheduling	AVI-ON Bluetooth Mobile App
CONTROL-BLE-620 (see page 7 for detail)	Fixture Controller	Integral to Fixture	-	12V DC	CCT Tuning Dimming Grouping Time Schedule	ALS Control Bluetooth Mobile App
SENSOR-BLE-7 (see page 8 for detail)	Microwave	up to 13FT	17FT radius	12V DC	Bluetooth Mesh On/Off/Dimming Motion Daylight Sensing	ALS Control Bluetooth Mobile App
SENSOR-ANT-7 (see page 9 for detail)	Microwave	up to 12FT	17FT radius	10V DC	On/Off/Dimming Motion Daylight Sensing	REMOTE-RC100

CONTROL-LVFA

CONTROL-BLE-620

SENSOR-ANT-7
SENSOR-BLE-7

EMB SPEC

Model	Battery Capacity	Input	Output	Output Power	Operating Temp	Installation
EMB-H08170	90mins	100-347VAC	170VDC	8W	0°C ~ 50°C 32°F ~ 122°F	Factory or Field Install
EMB-H18170	90mins	100-347VAC	170VDC	18W	0°C ~ 50°C 32°F ~ 122°F	Factory or Field Install

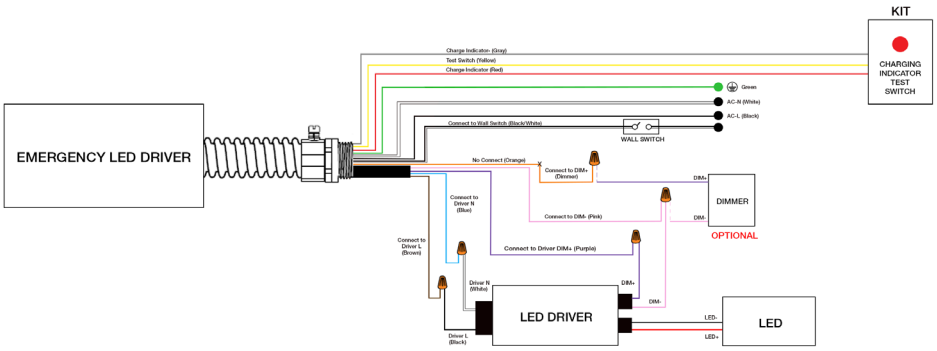

LPAW WET LOCATION SELECTABLE BACKLIT PANEL

CONTROL-LVFA SPEC

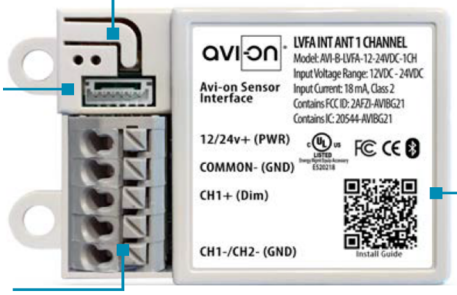

Status LEDs & Config Button
Quick and easy validation of wiring and network

Direct Connect™ Sensor Port
Simple and cost-effective addition to Avi-on sensors

Terminal Blocks & Mounting Tabs
Faster, easier and lower cost installation eliminating connectors

Internal Antenna
Improved performance and eliminates risk of accidentally cutting a hanging wire

SPECIFICATIONS

INPUT VOLTAGE:	12-24VDC
CURRENT:	15mA without a Sensor 19mA with a DC PIR Sensor 48mA with a DC Microwave Sensor
0-10V DIMMING:	12-24VDC
SIZE:	2.30in x 1.43in x 0.75in (58.2mm x 36.4mm x 19mm)
MOUNTING:	Removable mounting tabs
WEIGHT:	0.45 oz (16g)
OPERATING TEMP:	-22°F to +158°F (-30°C to + 70°C)

RADIO FREQUENCY:	2.4GHz
WIRELESS STANDARD:	BLE 4.2 with Mesh
POINT TO POINT RANGE*:	80ft with obstructions 350ft unobstructed
SECURITY:	AES 128-bit encryption for device to device communication AES 256-bit encryption for device to cloud communication
WARRANTY:	5 years; 10 years optional
REGULATORY:	FCC: 2AFZI-AVI1010 B IC: 20544-AVI1010 B BQB: D031801, DID: 86303 UL 916, 2043 (Plenum Rated)

*When communicating through the mesh, range is essentially unlimited (5000ft+)

WIRING DIAGRAM

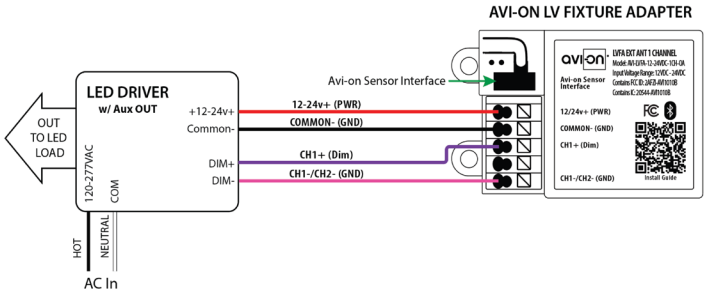

Fixture adapter powered by LED driver auxiliary output

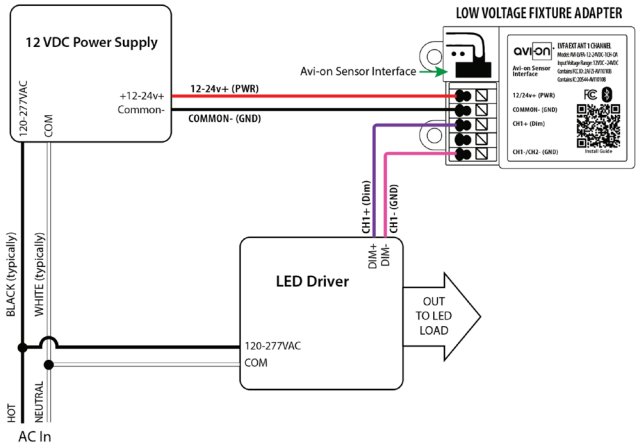

Fixture adapter connected to LED driver and using power supply

ALS CONTROL

CONTROL-BLE-620 BLUETOOTH CONTROLLER

Client:
Project:
Type:
Quantity:

FEATURE

- **Installation:** Factory installed, 12V AUX power required
- **Commissioning:** Wirelessly through ALS Control Mobile App (iOS / Android)
- **Certification:** DLC 5.1 Networked Lighting Control System
- **Control:** Dimming, High-End Trim, Zoning, Continuous Bi-level Dimming
- **CCT Tuning:** CCT Tuning feature for Dual/Multi-CCT LED board fixture only
- **Sensor:** Plug-N-Play with ALS Control sensors
- **Zone Control:** Zoning and Grouping control, Scheduling

SPECIFICATIONS

WIRELESS STANDARDS:	5.0 Bluetooth Mesh
INPUT VOLTAGE:	12-14VDC, >50mA
OUTPUT VOLTAGE:	LED Max. 150VDC Max. 2A
CONTROL OUTPUT:	0-10V
OPERATING TEMP:	-40°F ~ +158°F (-40°C ~ +70°C)
COMMISSIONING RANGE:	50FT
BLUETOOTH RANGE:	100FT
WARRANTY:	5 years
IP RATING:	IP20

DIMENSIONS

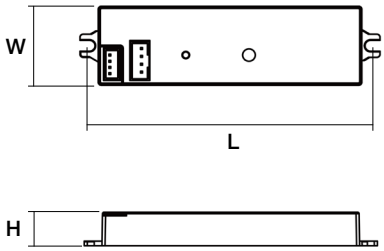

L	H	W
3.5” (89mm)	0.43” (11mm)	1.00” (26mm)

Lead Wire	Antenna Wire
10.60” (270mm)	10.60” (270mm)

WIRING DIAGRAM

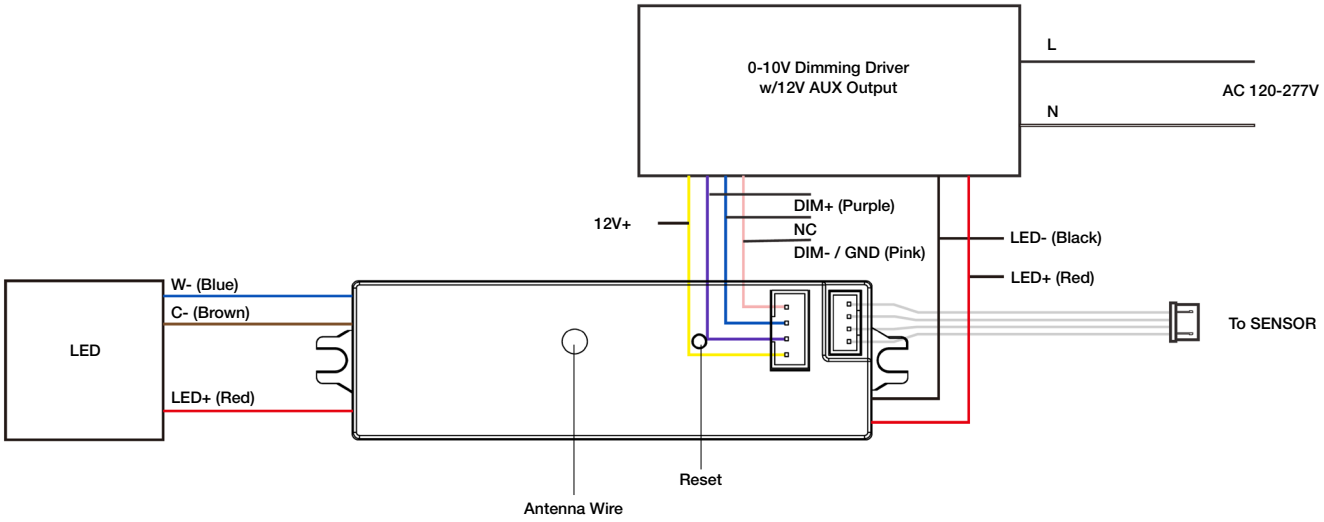

ALS CONTROL

SENSOR-BLE-7 BLUETOOTH MICROWAVE SENSOR

Client:
Project:
Type:
Quantity:

FEATURE

- **Installation:** Factory Install - Integral to Fixture
- **Commissioning:** Wirelessly through ALS Control Mobile App (iOS / Android)
- **Certification:** DLC 5.1 Networked Lighting Control System
- **Control:** Hold time, High-Low setting, continuous Bi-level dimming, Code-compliant manual-on or auto-off capability
- **Sensor:** Motion (Occupancy/Vacancy/Manual)
- **Room and Zone Control:** Zoning and Grouping control, Scheduling

SPECIFICATIONS

SENSOR TYPE:	Microwave	**COMMISSIONING RANGE:**	50FT
WIRELESS STANDARDS:	Bluetooth SIG Mesh	**BLUETOOTH RANGE:**	Integral antenna up to 164FT
INPUT VOLTAGE:	10-14VDC, >50mA	**DETECTION ANGLE:**	360°
CONTROL OUTPUT:	0-10V	**MOUNTING HEIGHT:**	Up to 13FT
OPERATING TEMP:	-40°F ~ +158°F (-40°C ~ +70°C)	**WARRANTY:**	5 years
		IP RATING:	IP20

DIMENSIONS

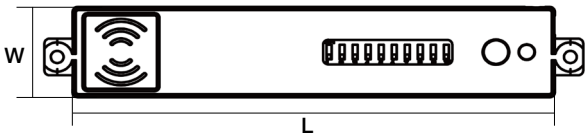

L	W
3.70” (94mm)	0.73” (18.5mm)

COVERAGE PATTERNS

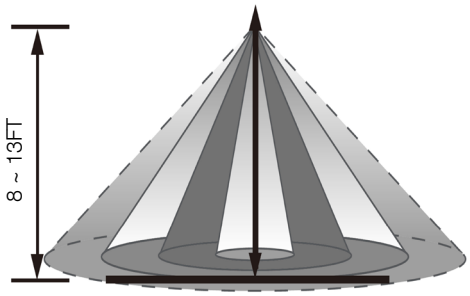

Height of Installation 8 ~13FT

Detection Range

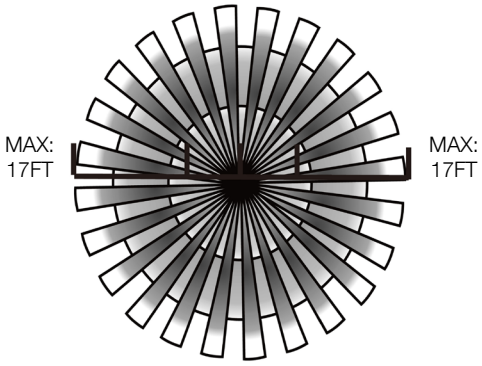

Height of Installation 8FT

Detection Angle

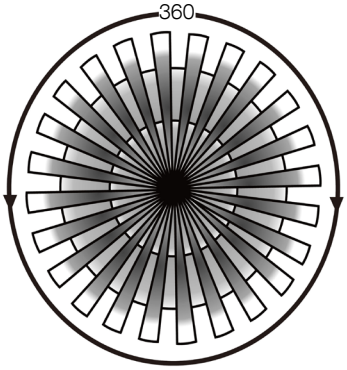

ALS CONTROL

SENSOR-ANT-7 MICROWAVE SENSOR

Client:
Project:
Type:
Quantity:

FEATURE

- **Installation:** Factory Install - Integral to Fixture
- **Commissioning:** through Remote Control
- **Control:** Hold time, High-Low setting, Continuous Bi-Level Dimming, Code-Compliant Manual-On or Auto-Off Capability
- **Sensor:** Motion (Occupancy/Vacancy/Manual)

SPECIFICATIONS

SENSOR TYPE:	Microwave
INPUT VOLTAGE:	12-24VDC, >50mA
LIGHT-CONTROL:	10 ~ 50LUX
CONTROL OUTPUT:	0-10V
OPERATING TEMP:	-40°F ~ +158°F (-40°C ~ +70°C)
COMMISSIONING RANGE:	50FT from Remote Control
TIME SETTING:	10sec ~ 60min (adjustable)
DETECTION ANGLE:	360°
MOUNTING HEIGHT:	Up to 12FT
WARRANTY:	5 years
IP RATING:	IP20

DIMENSIONS

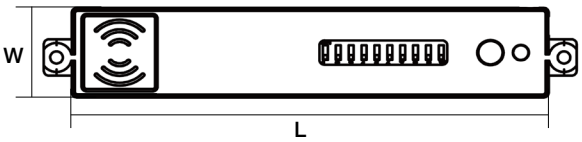

L	W
3.70” (94mm)	0.73” (18.5mm)

COVERAGE PATTERNS

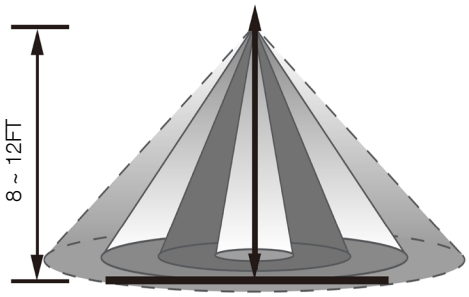

Height of Installation 8 ~12FT

Detection Range

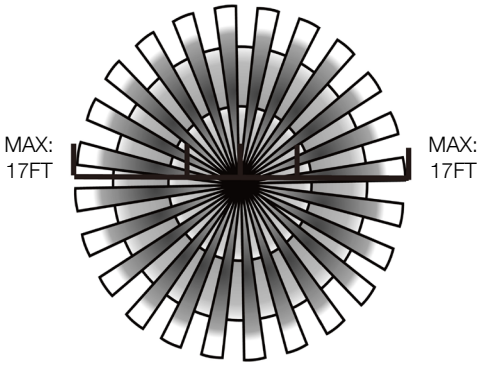

Height of Installation 8FT

Detection Angle

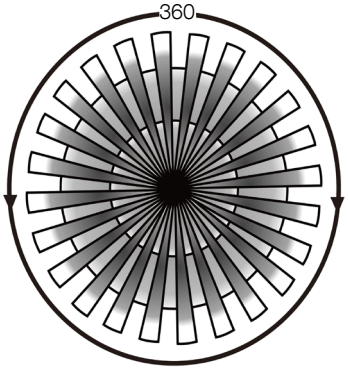

Client:
Project:
Type:
Quantity:

GTD-ESRLUD Generator Transfer Device

CONSTRUCTION

Yellow metal casing. Integrates with dry contact systems to provide lighting during power outages. Features a slim enclosure, allowing for seamlessly integrating into existing building infrastructure.
Designed for commercial and industrial applications that require an emergency load to be switched on during a loss of normal power.

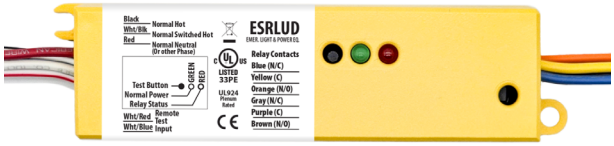

SPECIFICATIONS

COIL CURRENT:	Normal Power = 6mA MAX
COIL VOLTAGE INPUT:	120-277V AC (50/60 Hz)
EXPECTED RELAY LIFE:	10 Million Cycles Min Mechanical
RELAY CONTACT RATINGS:	10 Amp Resistive @ 30 V DC 10 Amp General Use @ 277 V AC
OPERATING TEMP:	-30°F ~ +140°F (-34°C ~ +60°C)
OPERATE TIME:	18ms
HUMIDITY RANGE:	5-95% (Noncondensing)
LED:	Green = Normal Power Red = Relay Status
DIMENSIONS:	1.40”H x 5.63”W x 1.00”D
WIRES:	16”, 600V Rated
OVERRIDE (TEST SWITCH):	No
APPROVALS:	UL924, C-UL, CE, ROHS
NOTES:	Device Draws no Current From Emergency Source

TESTING

INITIAL TEST FOR CORRECT WIRING:	Apply Normal Power To Normal Power Input a. Green LED (Normal Power) should be ON b. Red LED (Relay Status) should be ON c. Load should be OFF d. Relay Contact (N/O) should be CLOSED
LOCAL TEST BUTTON:	1. Turn Switched Circuit OFF. Load be OFF. 2. Press and Hold “Local Test Button” 3. Load should Turn ON 4. Release “Local Test Button” and Emergency Light should Turn OFF.
WALL SWITCH:	1. Turn ON Wall Switch If not already ON 2. Load should Turn ON 3. Turn Wall Switch OFF 4. Load will Turn OFF

TROUBLESHOOTING

CONDITION	ACTION
Green LED is OFF	• Check Normal Power Input Wiring (Black and Red Wires) and Voltage.
Red LED is OFF but Load is OFF	• Check Bulbs and Ballast. • Check Load Wiring (Blue Wire and Load’s Neutral). • Replace Unit. (Assuming N/C Contact is Used).
Load is ON but Red LED is ON	• Replace Unit. (Assuming N/C Contact is Used).
Red LED does not Turn OFF and Load does not Turn ON when being tested	• Check Bulbs and Ballast. • Check Wiring Connections if Using a Remote Test Option. • Press Local Test Button on the Unit. • Replace Unit.
Red LED will not Turn ON and Load will not Turn OFF	• Verify Status of Normal Power Input. • Open Wall Switch Input. • Verify That No Test Inputs are Stuck Closed.

WIRING DIAGRAM

USING EMERGENCY LIGHTING AS NORMAL LIGHTING

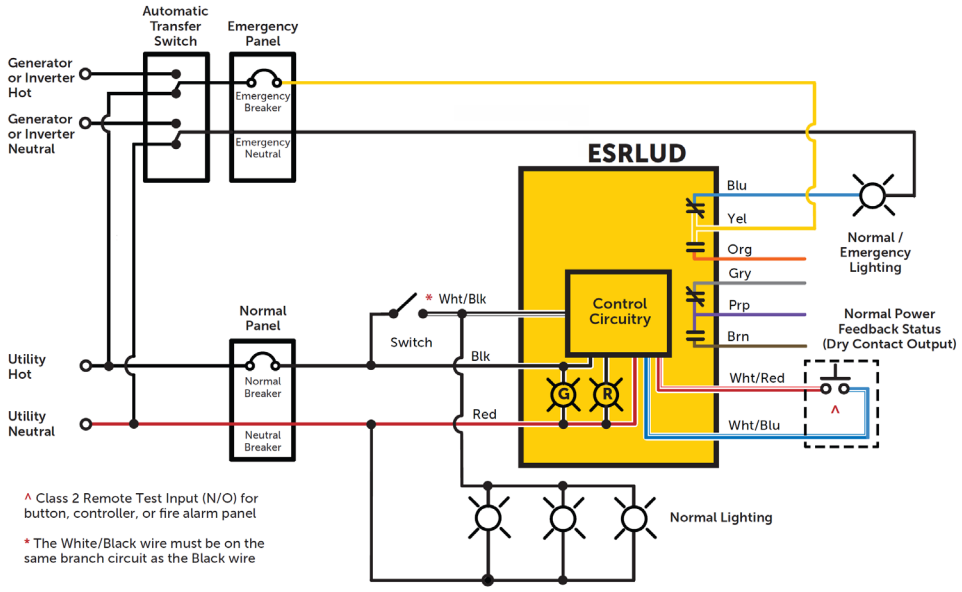
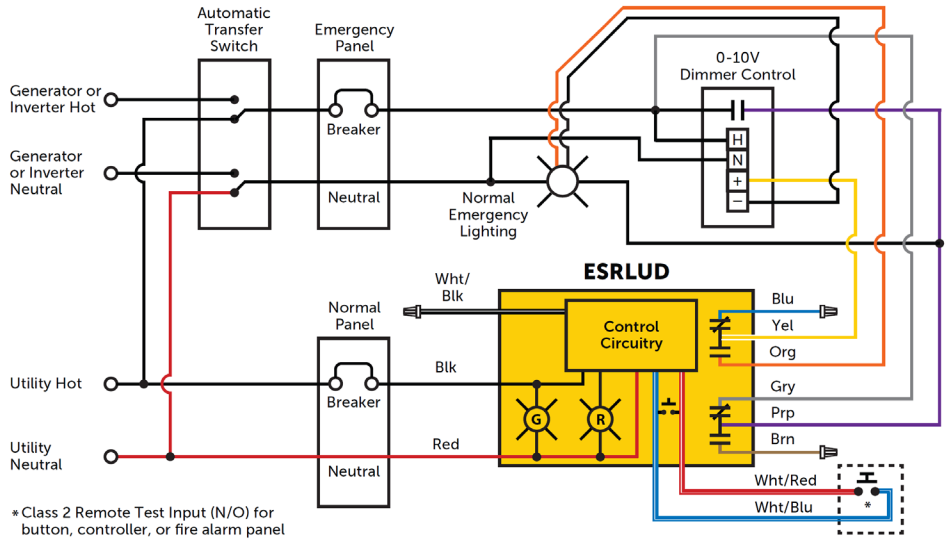
OVERRIDING A 0-10V DIMMER