Client:
Project:
Type:
Quantity:

TREA SERIES G2 SELECTABLE LED TROFFER

TREA-4 (Gen 2)

CONSTRUCTION

22-gauge metal frame, 95% reflective white polyester powder coat bonded to phosphate-free multi-stage pretreated metal. All parts painted after fabrication to facilitate installation, increase efficiency and inhibit corrosion. All corners are rounded for safe handling. Multiple wiring entrances on driver enclosure for easy access. Integral T-bar clips for installation into T-grid ceilings.

OPTICS

Backlit design provides exceptional lighting distribution. Frosted polycarbonate lens offers edge to edge smooth illumination for maximum visual comfort.

ELECTRICAL

80 CRI standard. 90 CRI optional.
Long-life LEDs, coupled with a high-efficiency driver, provide superior illumination for extended service life. Greater than 70% LED lumen maintenance at 60,000 hours (L70>60,000).
Selectable lumen and CCT technology allows easy field-adjustable capability, luminaire ships with maximum output and 4000K CCT setting.
All CCTs are within 3 MacAdam ellipses.
Driver operates at 120-277V input, 0-10V dimmable driver, down to 10%.
Integral thermal protection from driver, maximum output reduced by 50% when TC temperature reach 80C.

SENSORS (OPTIONAL)

CONTROL-LVFA AVI-ON Bluetooth Mesh Controller.
CONTROL-BLE-620 Bluetooth Wireless Fixture Controller for CCT Tuning, Dimming, Grouping, Scheduling Features (ALS Control Mobile App).

MOUNTING

Designed to accommodate lay-in ceilings, Slot T, and T-bar suspension system for 5/8" and 3/8" width.
Built-in earthquake clips come standard.
Surface/cable mount applications, use surface mount accessories.
Plaster or sheetrock installations, select flange kit.

SHIPPING DATA

Product	Measurement	Weight
TREA-G2-1 (2-pack)	48"L x 12"W x 3"H	16 lb
TREA-G2-2 (2-pack)	24"L x 24"W x 3"H	15 lb
TREA-G2-4 (2-pack)	48"L x 24"W x 3"H	24 lb

STANDARD FINISH

High Reflective White finish.

CERTIFICATION

IC Rated.
Damp location label standard.
Meets Buy America Act requirements.
Option for "BABA" compliance upon request.
All luminaires are built to UL1598 standards and bear appropriate cULus labels.
For Emergency application, equipment with UL924 certified battery packs.
DLC® Premium (DesignLights Consortium Qualified)

WARRANTY

5 year warranty, see Limited Warranty for additional information.

TREA SERIES G2 SELECTABLE LED TROFFER

ORDER INFORMATION

EXAMPLE: TREA G2 2

Fixture	Series	Model	Finish	Input
	TREA		blank	

Mounting

Accessories
Options

A SERIES

TREA	Selectable Lumen and CCT LED Troffer

B MODEL

Code	Size	Power	CCT	Output
1-G2	1x4	20W / 25W / 30W	3000K / 3500K / 4000K / 5000K / 6500K	up to 4500lm
2-G2	2x2	25W / 30W / 35W	3000K / 3500K / 4000K / 5000K / 6500K	up to 5250lm
4-G2	2x4	34W / 38W / 45W	3000K / 3500K / 4000K / 5000K / 6500K	up to 6750lm

C FINISH

blank	White

D INPUT

blank	120-277V, 10% 0-10V Dimming w/12V AUX Output	**MD**	120-347V, 10% 0-10V Dimming w/12V AUX Output
UD1%	120-277V, 1% 0-10V Dimming w/12V AUX Output		

G MOUNTING

blank	Standard lay-in
MOUNT-LP-14-FGK	1.52” Tall 1x4 Flange Kit (Plaster, Sheetrock or Drywall)
MOUNT-LP-22-FGK	1.52” Tall 2x2 Flange Kit (Plaster, Sheetrock or Drywall)
MOUNT-LP-24-FGK	1.52” Tall 2x4 Flange Kit (Plaster, Sheetrock or Drywall)
MOUNT-LP-14-SMK	4” Tall 1x4 Surface Mount Kit
MOUNT-LP-22-SMK	4” Tall 2x2 Surface Mount Kit
MOUNT-LP-24-SMK	4” Tall 2x4 Surface Mount Kit

H ACCESSORIES/OPTIONS

BAA	Assembled in America, compliant with BAA (COTS)
BABA	Build America, Buy America Act (BABAA) Compliant
90CRI	90CRI
ZENOR-DIODE*	Custom Output Controller, specify **Wattage / Lumen Value** _____
CONTROL-LVFA*	AVI-ON Bluetooth Mesh Control System
CONTROL-BLE-620*	Bluetooth Wireless Fixture Controller for CCT Tuning, Dimming, Grouping, Scheduling Features (ALS Control Mobile App)
EMB-H08170*	90-Minute Self-Diagnostic Emergency Battery 8W 100-347VAC Input 170VDC Output
EMB-H18170*	90-Minute Self-Diagnostic Emergency Battery 18W 100-347VAC Input 170VDC Output
EMB-H40170*	90-Minute Self-Diagnostic Emergency Battery 40W 100-347VAC Input 170VDC Output
GTD-ESRLUD**	Emergency Battery Generator Transfer Device 120-277 VAC Input
-C	3/8” x 6FT Steel Flex 5-18AWG Solid 6’ leads BLK/WH/GRN/PUR/PNK & 3/8” Die Cast Screw-In Locknut Connectors

*see page 5 for sensor and emb specs

**see page 8 and 9 and GTD spec

TREA SERIES G2 SELECTABLE LED TROFFER

DIMENSIONS

Model	W	L	H
TREA-1-G2	11.70” (298mm)	47.80” (1213mm)	2.0” (50mm)
TREA-2-G2	23.76” (603mm)	23.76” (603mm)	2.1” (54mm)
TREA-4-G2	23.76” (603mm)	47.80” (1213mm)	2.1” (54mm)

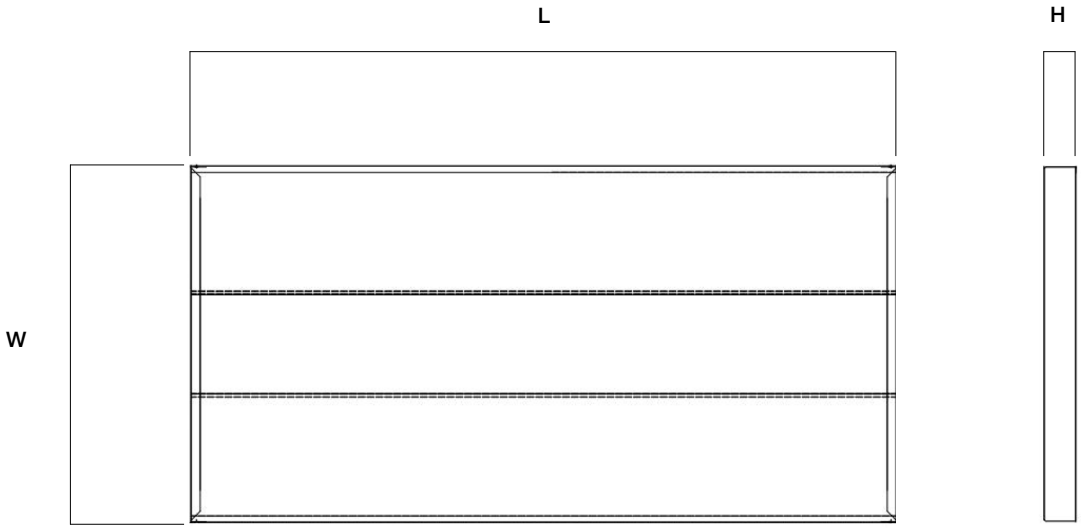

PERFORMANCE DATA

SYSTEM WATTS	SIZE	VOLTAGE	LUMEN	LPW	QTY ON PALLET
20W	1x4	120-277V	3000	150	100
25W	1x4	120-277V	3750	150	100
30W	1x4	120-277V	4500	150	100
25W	2x2	120-277V	3750	150	120
30W	2x2	120-277V	4500	150	120
35W	2x2	120-277V	5250	150	120
34W	2x4	120-277V	5100	150	60
38W	2x4	120-277V	5700	150	60
45W	2x4	120-277V	6750	150	60

DLC CODE

Part Number	DLC Part Nnumber	DLC Class
TREA-1-G2	S-SPVG2B	Premium
TREA-2-G2	S-VQ2AI1	Premium
TREA-4-G2	S-8MCVZA	Premium

Advantage Lighting Solutions® - All Rights Reserved

TREA SERIES G2 SELECTABLE LED TROFFER

Model	Type	Mounting	Coverage	Input	Function	Programmable
ZENOR-DIODE	Output Controller	Integral to Fixture	-	0-10V	Cap Maximum Output	Specify Max Wattage / Lumen
CONTROL-LVFA (see page 6 for detail)	Fixture Controller	Integral to Fixture	-	12V DC	Bluetooth Mesh On/Off/Dimming Scheduling	AVI-ON Bluetooth Mobile App
CONTROL-BLE-620 (see page 7 for detail)	Fixture Controller	Integral to Fixture	-	12V DC	CCT Tuning Dimming Grouping Time Schedule	ALS Control Bluetooth Mobile App

ZENOR-DIODE

CONTROL-BLE-620

CONTROL-LVFA

EMB SPEC

Model	Battery Capacity	Input	Output	Output Power	Operating Temp	Installation
EMB-H08170	90mins	100-347VAC	170VDC	8W	0°C ~ 50°C 32°F ~ 122°F	Factory or Field Install
EMB-H18170	90mins	100-347VAC	170VDC	18W	0°C ~ 50°C 32°F ~ 122°F	Factory or Field Install
EMB-H40170	90mins	100-347VAC	170VDC	40W	0°C ~ 50°C 32°F ~ 122°F	Factory or Field Install

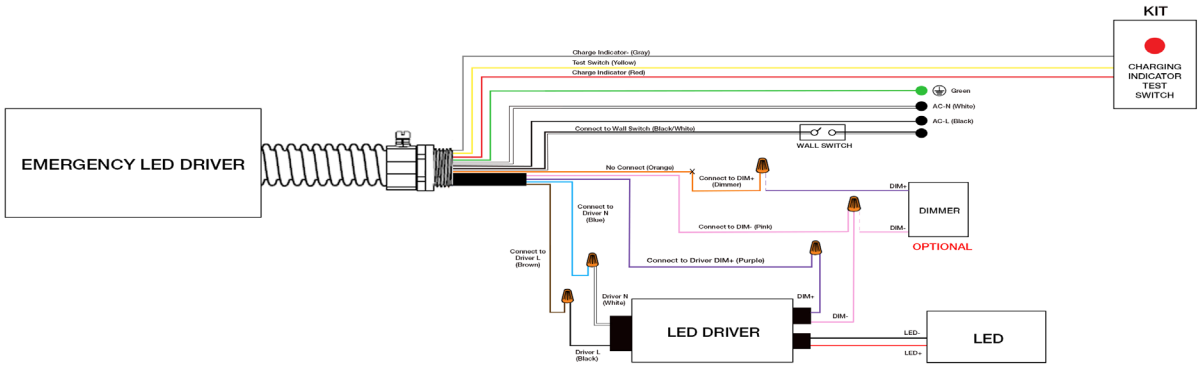

TREA SERIES G2 SELECTABLE LED TROFFER

CONTROL-LVFA SPEC

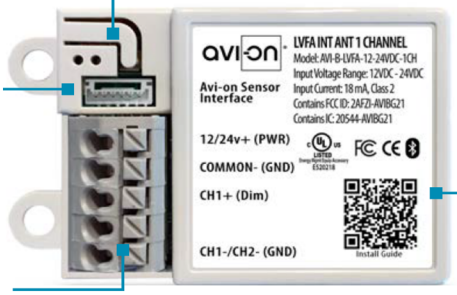

Status LEDs & Config Button
Quick and easy validation of wiring and network

Direct Connect™ Sensor Port
Simple and cost-effective addition to Avi-on sensors

Terminal Blocks & Mounting Tabs
Faster, easier and lower cost installation eliminating connectors

Internal Antenna
Improved performance and eliminates risk of accidentally cutting a hanging wire

SPECIFICATIONS

INPUT VOLTAGE:	12-24VDC
CURRENT:	15mA without a Sensor 19mA with a DC PIR Sensor 48mA with a DC Microwave Sensor
0-10V DIMMING:	12-24VDC
SIZE:	2.30in x 1.43in x 0.75in (58.2mm x 36.4mm x 19mm)
MOUNTING:	Removable mounting tabs
WEIGHT:	0.45 oz (16g)
OPERATING TEMP:	-22°F to +158°F (-30°C to + 70°C)

RADIO FREQUENCY:	2.4GHz
WIRELESS STANDARD:	BLE 4.2 with Mesh
POINT TO POINT RANGE*:	80ft with obstructions 350ft unobstructed
SECURITY:	AES 128-bit encryption for device to device communication AES 256-bit encryption for device to cloud communication
WARRANTY:	5 years; 10 years optional
REGULATORY:	FCC: 2AFZI-AVI1010 B IC: 20544-AVI1010 B BQB: D031801, DID: 86303 UL 916, 2043 (Plenum Rated)

*When communicating through the mesh, range is essentially unlimited (5000ft+)

WIRING DIAGRAM

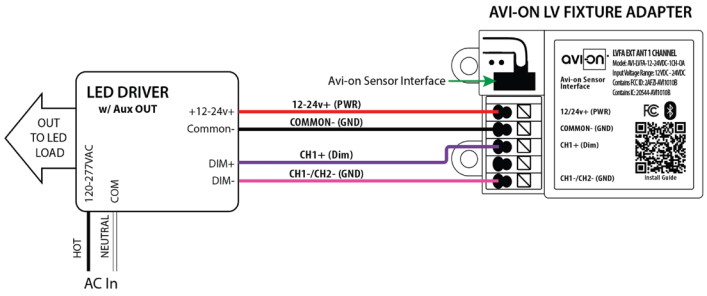

Fixture adapter powered by LED driver auxiliary output

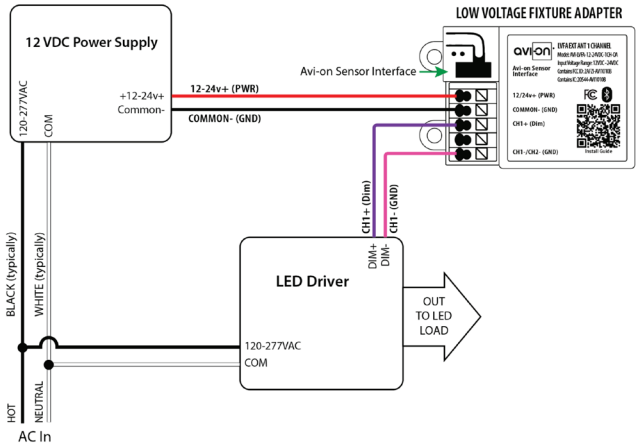

Fixture adapter connected to LED driver and using power supply

ALS CONTROL

CONTROL-BLE-620 BLUETOOTH CONTROLLER

Client:
Project:
Type:
Quantity:

FEATURE

- **Installation:** Factory installed, 12V AUX power required
- **Commissioning:** Wirelessly through ALS Control Mobile App (iOS / Android)
- **Certification:** DLC 5.1 Networked Lighting Control System
- **Control:** Dimming, High-End Trim, Zoning, Continuous Bi-level Dimming
- **CCT Tuning:** CCT Tuning feature for Dual/Multi-CCT LED board fixture only
- **Sensor:** Plug-N-Play with ALS Control sensors
- **Zone Control:** Zoning and Grouping control, Scheduling

SPECIFICATIONS

WIRELESS STANDARDS:	5.0 Bluetooth Mesh
INPUT VOLTAGE:	12-14VDC, >50mA
OUTPUT VOLTAGE:	LED Max. 150VDC Max. 2A
CONTROL OUTPUT:	0-10V
OPERATING TEMP:	-40°F ~ +158°F (-40°C ~ +70°C)
COMMISSIONING RANGE:	50FT
BLUETOOTH RANGE:	100FT
WARRANTY:	5 years
IP RATING:	IP20

DIMENSIONS

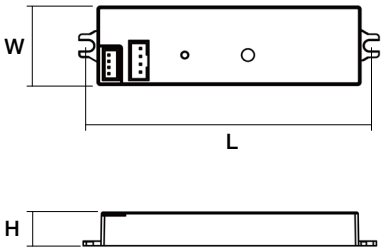

L	H	W
3.5” (89mm)	0.43” (11mm)	1.00” (26mm)

Lead Wire	Antenna Wire
10.60” (270mm)	10.60” (270mm)

WIRING DIAGRAM

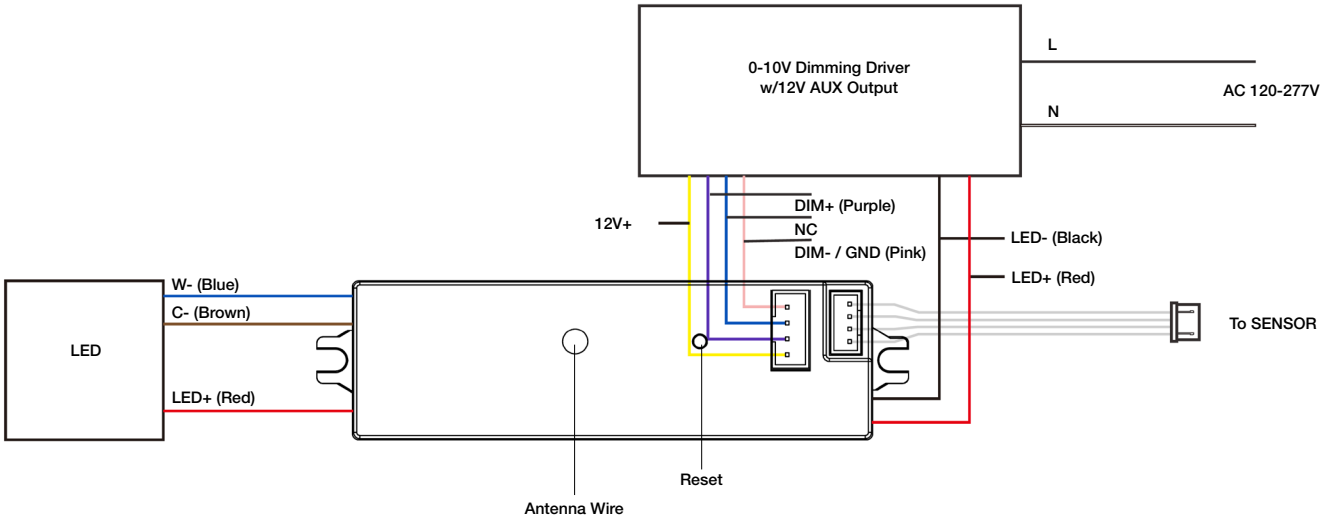

Client:
Project:
Type:
Quantity:

GTD-ESRLUD Generator Transfer Device

CONSTRUCTION

Yellow metal casing. Integrates with dry contact systems to provide lighting during power outages. Features a slim enclosure, allowing for seamlessly integrating into existing building infrastructure.
Designed for commercial and industrial applications that require an emergency load to be switched on during a loss of normal power.

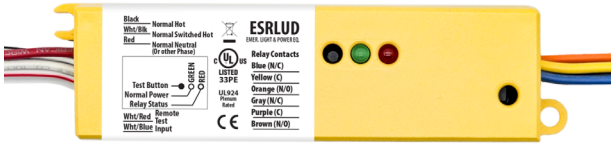

SPECIFICATIONS

COIL CURRENT:	Normal Power = 6mA MAX
COIL VOLTAGE INPUT:	120-277V AC (50/60 Hz)
EXPECTED RELAY LIFE:	10 Million Cycles Min Mechanical
RELAY CONTACT RATINGS:	10 Amp Resistive @ 30 V DC 10 Amp General Use @ 277 V AC
OPERATING TEMP:	-30°F ~ +140°F (-34°C ~ +60°C)
OPERATE TIME:	18ms
HUMIDITY RANGE:	5-95% (Noncondensing)
LED:	Green = Normal Power Red = Relay Status
DIMENSIONS:	1.40”H x 5.63”W x 1.00”D
WIRES:	16”, 600V Rated
OVERRIDE (TEST SWITCH):	No
APPROVALS:	UL924, C-UL, CE, ROHS
NOTES:	Device Draws no Current From Emergency Source

TESTING

INITIAL TEST FOR CORRECT WIRING:	Apply Normal Power To Normal Power Input a. Green LED (Normal Power) should be ON b. Red LED (Relay Status) should be ON c. Load should be OFF d. Relay Contact (N/O) should be CLOSED
LOCAL TEST BUTTON:	1. Turn Switched Circuit OFF. Load be OFF. 2. Press and Hold “Local Test Button” 3. Load should Turn ON 4. Release “Local Test Button” and Emergency Light should Turn OFF.
WALL SWITCH:	1. Turn ON Wall Switch If not already ON 2. Load should Turn ON 3. Turn Wall Switch OFF 4. Load will Turn OFF

TROUBLESHOOTING

CONDITION	ACTION
Green LED is OFF	• Check Normal Power Input Wiring (Black and Red Wires) and Voltage.
Red LED is OFF but Load is OFF	• Check Bulbs and Ballast. • Check Load Wiring (Blue Wire and Load’s Neutral). • Replace Unit. (Assuming N/C Contact is Used).
Load is ON but Red LED is ON	• Replace Unit. (Assuming N/C Contact is Used).
Red LED does not Turn OFF and Load does not Turn ON when being tested	• Check Bulbs and Ballast. • Check Wiring Connections if Using a Remote Test Option. • Press Local Test Button on the Unit. • Replace Unit.
Red LED will not Turn ON and Load will not Turn OFF	• Verify Status of Normal Power Input. • Open Wall Switch Input. • Verify That No Test Inputs are Stuck Closed.

Advantage Lighting Solutions® - All Rights Reserved

WIRING DIAGRAM

USING EMERGENCY LIGHTING AS NORMAL LIGHTING

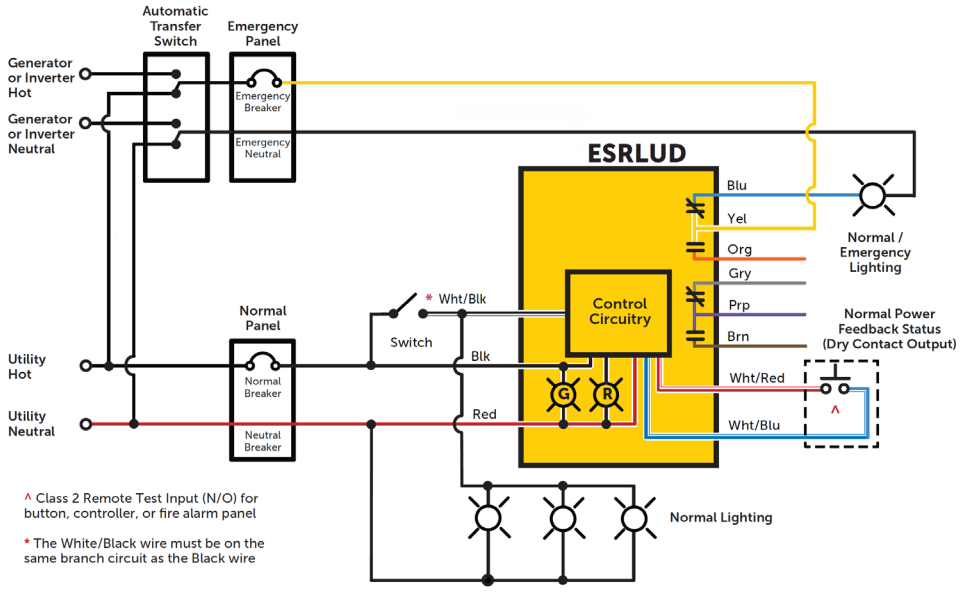
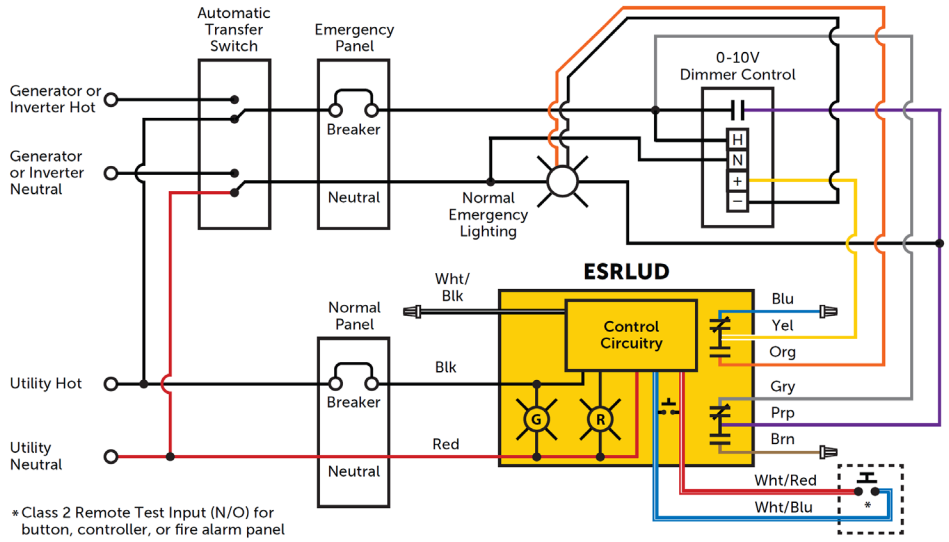
OVERRIDING A 0-10V DIMMER