RDC REMOTE DRIVER CABINET

Client:
Project:
Type:
Quantity:

CONSTRUCTION

Heavy-duty galvanized steel distribution box with durable powder coat finish designed for sports lighting systems. Integrated enclosure houses driver, control, and protection components for streamlined installation and maintenance. Pole-mounted design allows concealed internal wiring with no exposed conduit for a clean professional appearance. Enclosure accommodates up to six driver power supplies. Suitable for indoor and outdoor wet location applications.

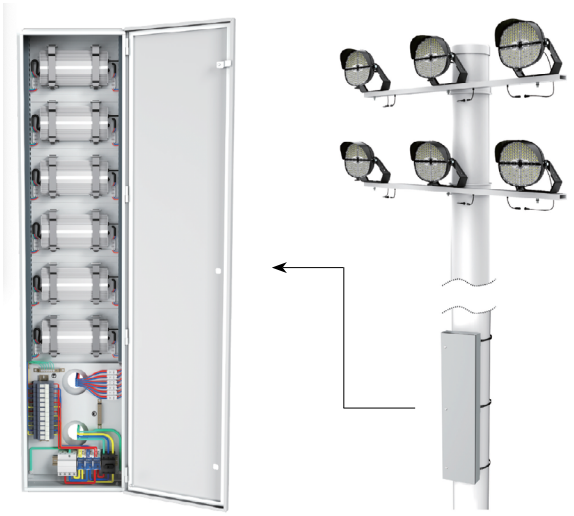

ELECTRICAL

L1 / L2 / L3: 120 / 277VAC input voltage, 3-phase configuration.
63A maximum input current.
50kA surge protection device included.
6-14 AWG input and output wire capacity.
Integrated fuse holders, grounding bar, switch-disconnector, and power distribution components.
Operating temperature range: -40°C to +50°C (-40°F to +122°F).

CONTROL (OPTIONAL)

Compatible with remote lighting control systems and sports lighting management platforms.
Supports integration with external control and monitoring components.

MOUNTING

Pole retrofit mounting design for sports lighting poles. Secured via banding for stable installation. Designed for pole diameters from 10” to 25”.
Internal wire routing minimizes exposed wiring and simplifies field installation.

STANDARD FINISH

Silvery gray powder coat finish over galvanized steel housing for corrosion resistance and long-term outdoor durability.

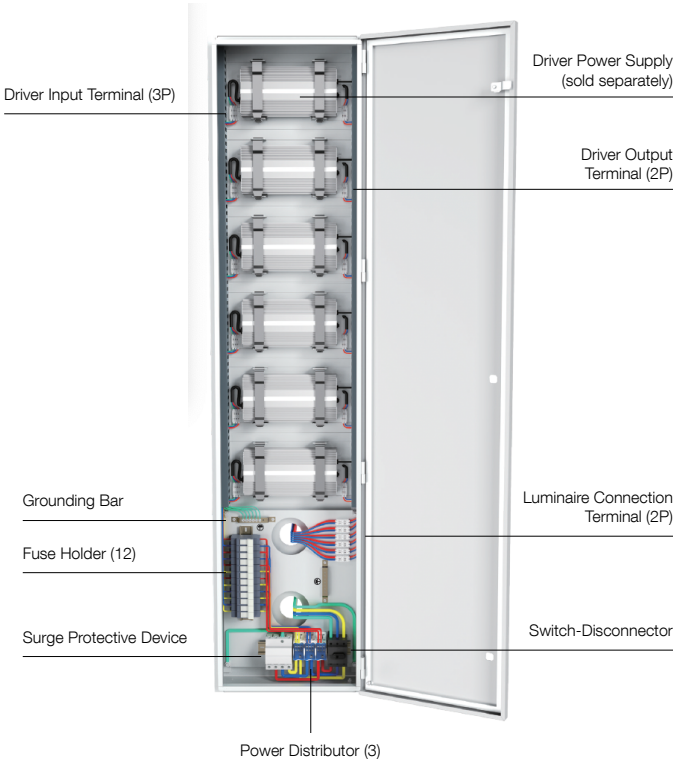

Advantage Lighting Solutions® - All Rights Reserved

RDC REMOTE DRIVER CABINET

ORDER INFORMATION

EXAMPLE : RDC SG HD

Fixture	Series	Finish	Input
	RDC	**SG**	**HD**

A SERIES

RDC	Remote Driver Cabinet, Holds up to 6 Drivers

B FINISH

SG	Silver Gray

C INPUT

HD	L1 / L2 / L3: 120 / 277VAC 3 Phase 63 Amps 50kA Surge Protection

Input
Wire Guage: 6-14 AWG
Fuse: 12-Slot Fuse Holder (Fuse included)
Surge Protector: 50kA Surge Protective Device
Power Distributor: 3
Switch Disconnector: Built-in

Output
Driver Input Terminal: 3 Poles
Grounding Bar
Wire Gauge: 6-14 AWG
Quick Connector: Lead Wire w/Quick Connector for ALS Sports Light, Compatible Model: SPM-G2, SPQ-G2

Advantage Lighting Solutions® - All Rights Reserved
Specifications are subject to change without notice

RDC REMOTE DRIVER CABINET

DIMENSIONS (POWER BOX)

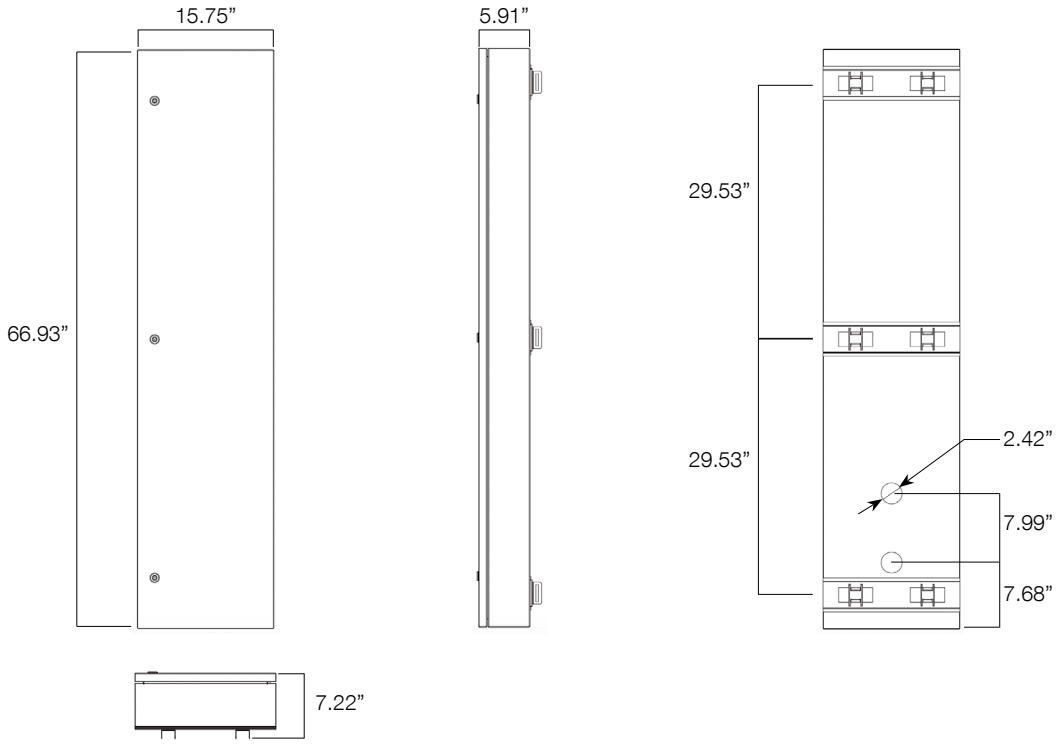

MOUNTING

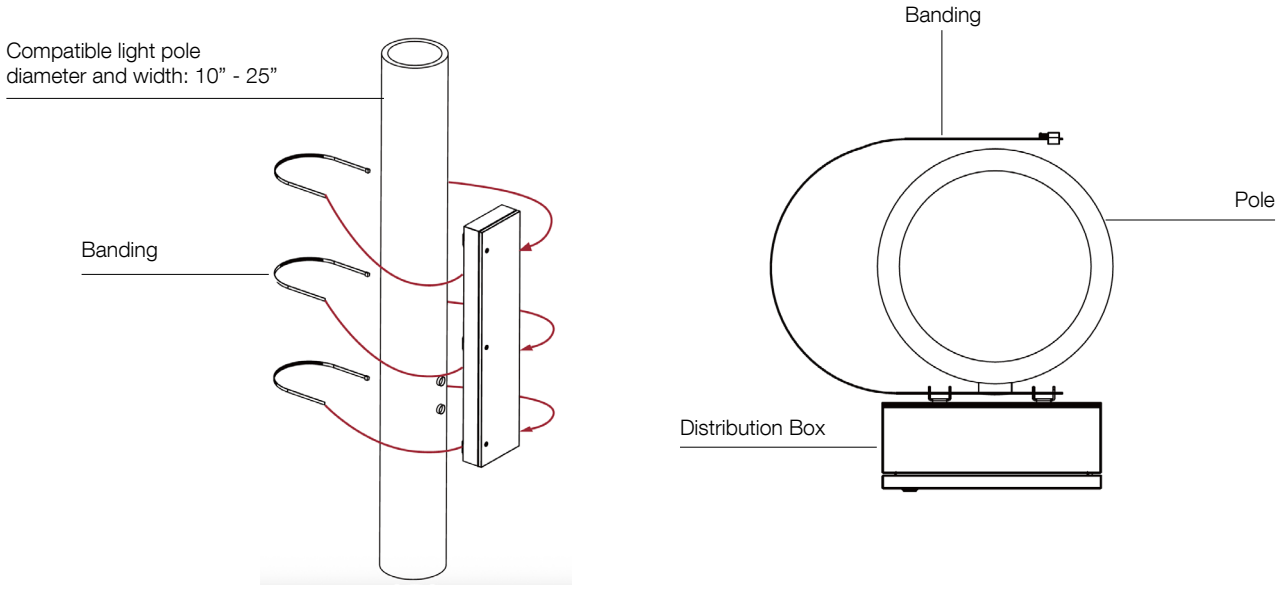

RDC REMOTE DRIVER CABINET

ELECTRICAL

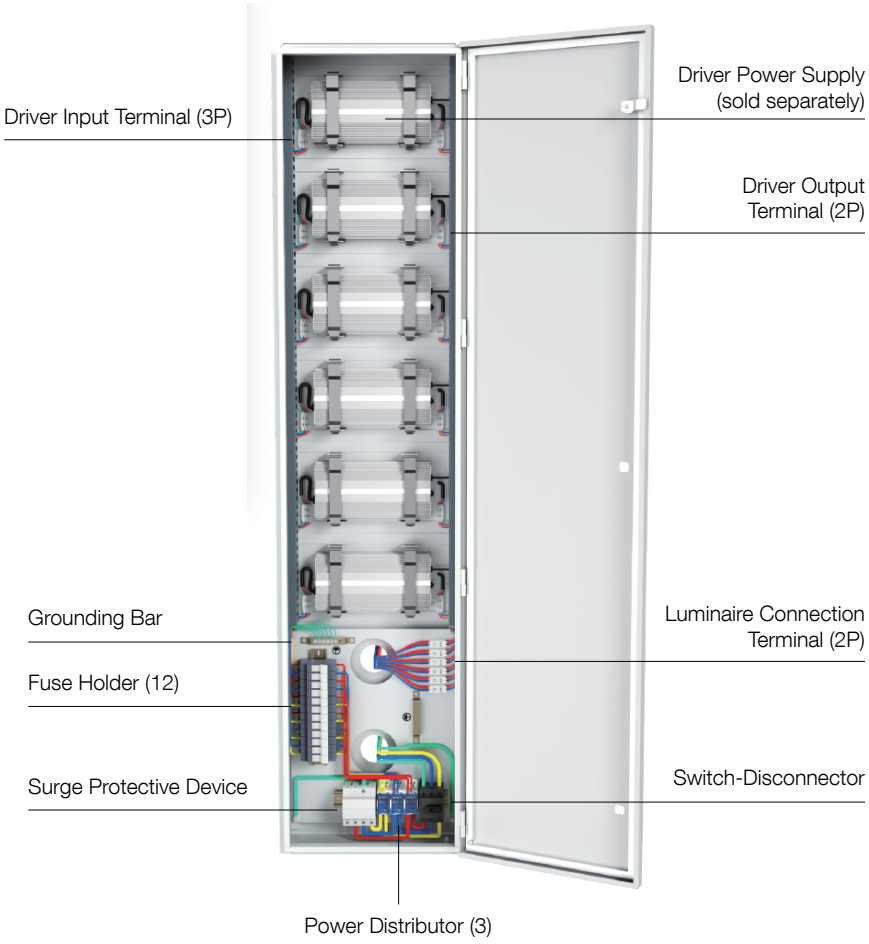

EFFECTIVE PROJECTED AREA (EPA)	NET WEIGHT	GROSS WEIGHT	MOUNTING
Max. 7.32 FT	93 lbs	132 lbs Max.	Pole Retrofit

INPUT VOLTAGE	PHASE	MAX. INPUT CURRENT	SURGE RATING	INPUT WIRE GAUGE	OUTPUT WIRE GAUGE
L1/L2/L3: 120-277VAC	3 Phase	63 Amps	50 KA	6-14 AWG	6-14 AWG

Advantage Lighting Solutions® - All Rights Reserved
Specifications are subject to change without notice