ALS®
Advantage Lighting Solutions

DLA-G2 SERIES WET LOCATION DOWNLIGHT

Client:
Project:
Type:
Quantity:

CONSTRUCTION
Die-cast aluminum body, available in 4”, 6”, 8” & 10” aperture. Entire luminaire as heat dissipation system, designed for general illumination application for long life and service period.
IC rated for direct contact with insulation.



OPTICS
Impact resistant diffuse polycarbonate lens, gasketed and sealed prevents splash of water or dust objects from entry.

ELECTRICAL
90+ CRI LEDs.
120-277V Input, 0-10V dimming.
CCT and Lumen Selectable Function.
Greater than 70% LED lumen maintenance at 50,000 hours.
Operating temperature: -4°F to +113°F (-20°C to +45°C).
Optional External Emergency Battery 120-277V Input.

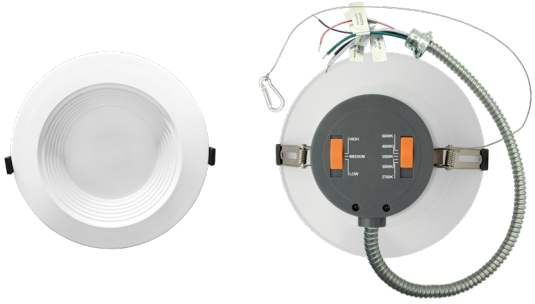

CCT / Lumen Selector

CONTROL (OPTIONAL)
CONTROL-XFAC AVI-ON Bluetooth Zone Controller Adapter

MOUNTING
New Construction: Flat torsion spring clips design to hold luminaire in place without using a housing.
New Construction: Mounting Frame available.
12” Flex conduit came with fixture for easy wiring with j-box.

SHIPPING DATA

Product	Measurement	Weight
DLA-G2-4	6”L x 6”W x 4”H	2 lb
DLA-G2-6	9”L x 9”W x 5”H	2 lb
DLA-G2-8	11”L x 11”W x 5”H	3 lb
DLA-G2-10	12”L x 12”W x 6”H	4 lb

STANDARD FINISH
Corrosion resistant matte White finish.

CERTIFICATION
Wet location standard.
Meets Buy America Act requirements.
All luminaires are built to UL1598 standards and bear appropriate cETLus labels.
Energy Star Certified.
California JA8, Title 24 Compliant

WARRANTY
5 year warranty, see Limited Warranty for additional information.

Advantage Lighting Solutions® - All Rights Reserved
Specifications are subject to change without notice

DLA-G2 SERIES WET LOCATION DOWNLIGHT

ORDER INFORMATION

EXAMPLE : DLA-G2 6 WH UD

Fixture	Series	Model	Finish	Input
	DLA-G2		WH	UD

Accessories Options

A SERIES

DLA-G2	DLA Gen 2 Wet location Downlight

B MODEL

Code	Trim Type	Power	LM	CCT
4	4-inch Trim	6W / 9W / 12W	628 / 893 / 1159	2700 / 3000 / 3500 / 4000 / 5000K
6	6-inch Trim	12W / 17W / 22W	1296 / 1694 / 2194	2700 / 3000 / 3500 / 4000 / 5000K
8	8-inch Trim	17W / 24W / 30W	1871 / 2621 / 3273	2700 / 3000 / 3500 / 4000 / 5000K
10	10-inch Trim	22W / 30W / 38W	2356 / 3141 /3892	2700 / 3000 / 3500 / 4000 / 5000K

C FINISH

WH	Smooth White finish

D INPUT

UD	120-277V, 0-10V Dimmable

E ACCESSORIES/OPTIONS

BAA	Assembled in America, compliant with BAA (COTS)
EMB-E08170*	90-Minute Self-Diagnostic Emergency Battery 8W 100-347VAC Input 170VDC Output w/Enclosure
MOUNT-NCR-G2-JB	Mounting Frame Plate w/ J-Box
CONTROL-XFAC*	AVI-ON Bluetooth Zone Controller Adapter
GOOFRING-6-WH	Goof Ring for DLA-G2-6
GOOFRING-8-WH	Goof Ring for DLA-G2-8
GOOFRING-10-WH	Goof Ring for DLA-G2-10

*see page 5 for sensor and emb spec

Advantage Lighting Solutions® - All Rights Reserved
Specifications are subject to change without notice

DLA-G2 SERIES WET LOCATION DOWNLIGHT

DIMENSIONS

MODEL	W1	W2	H	CUTOUT
DLA-G2-4	ø 5.12" (Ø130mm)	ø 2.99" (Ø76mm)	3.62" (92mm)	ø 4-21/64" (Ø110mm)
DLA-G2-6	ø 8.43" (Ø214mm)	ø 4.76" (Ø121mm)	4.56" (116mm)	ø 6-19/64" (Ø160mm)
DLA-G2-8	ø 10.00" (Ø255mm)	ø 5.06" (Ø129mm)	4.93" (126mm)	ø 8-5/64" (Ø205mm)
DLA-G2-10	ø 11.38" (Ø289mm)	ø 5.74" (Ø146mm)	5.29" (135mm)	ø 8-31/32" (Ø228mm)

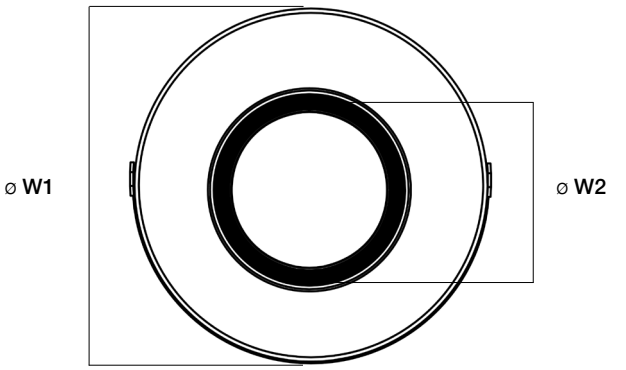

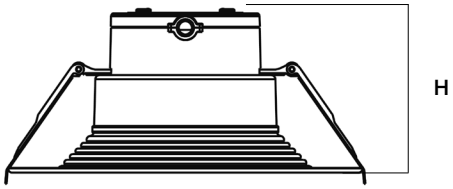

Goof Ring	W1	W2	H
GOOFRING-6-WH	ø 10.00" (Ø255mm)	ø 7.83" (Ø199mm)	0.11" (2.8mm)
GOOFRING-8-WH	ø 11.38" (Ø289mm)	ø 9.37" (Ø238mm)	0.15" (3.8mm)
GOOFRING-10-WH	ø 13" (Ø330mm)	ø 10.71" (Ø272mm)	0.14" (3.5mm)

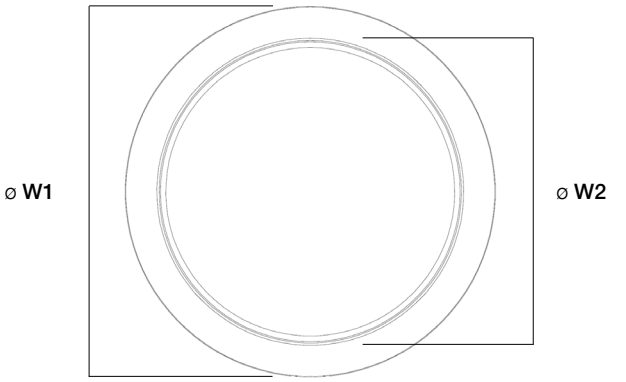

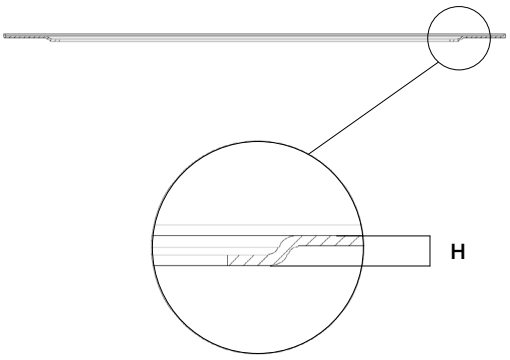

Advantage Lighting Solutions® - All Rights Reserved
Specifications are subject to change without notice

DLA-G2 SERIES WET LOCATION DOWNLIGHT

DIMENSIONS - OPTIONAL MOUNTING FRAME KIT

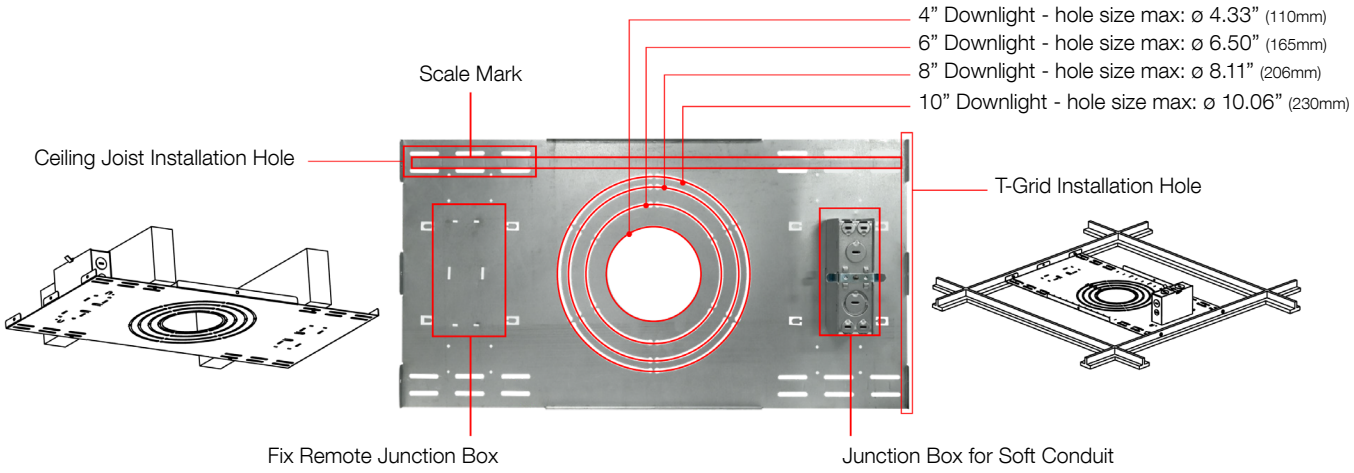

MOUNT-NCR-G2-JB - Round Trim Mounting Frame Kit w/ J-Box

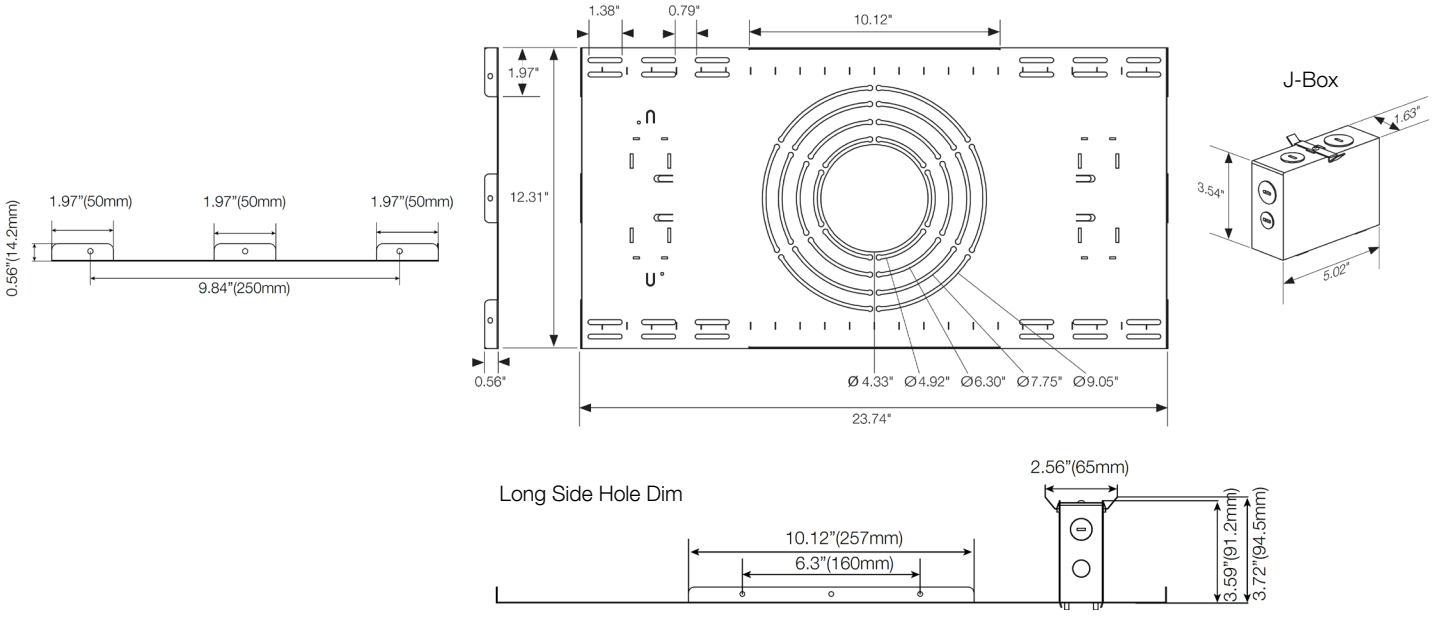

ALS®
Advantage Lighting Solutions

DLA-G2 SERIES WET LOCATION DOWNLIGHT

PERFORMANCE DATA

MODEL	VOLTAGE	WATTAGE	2700K		3000K		3500K		4000K		5000K	
			LUMENS	LPW	LUMENS	LPW	LUMENS	LPW	LUMENS	LPW	LUMENS	LPW
DLA-G2-4	110-277V	6W	705	118	725	121	735	123	748	125	746	124
	110-277V	9W	961	107	994	110	1019	113	1015	113	1009	112
	110-277V	12W	1196	100	1244	104	1267	106	1286	107	1279	107
DLA-G2-6	110-277V	12W	1241	103	1301	108	1336	111	1354	113	1340	112
	110-277V	17W	1721	101	1820	107	1879	111	1894	111	1820	107
	110-277V	22W	2104	96	2249	102	2334	106	2349	107	2247	102
DLA-G2-8	110-277V	17W	1860	109	1927	113	1982	117	2000	118	1956	115
	110-277V	24W	2460	103	2568	107	2657	111	2672	111	2576	107
	110-277V	30W	2906	97	3054	102	3199	107	3271	109	3103	103
DLA-G2-10	110-277V	22W	3105	141	2409	110	2619	119	2804	127	2918	133
	110-277V	30W	3643	121	3641	121	3782	126	3823	127	4481	149
	110-277V	38W	4139	109	4481	118	4504	119	4668	123	4668	123

DLA-G2 SERIES WET LOCATION DOWNLIGHT

EMB SPEC

Model	Battery Capacity	Input	Output	Output Power	Operating Temp	Installation
EMB-E08170	90mins	100-347VAC	170VDC	8W	0°C ~ 50°C 32°F ~ 122°F	Field Install

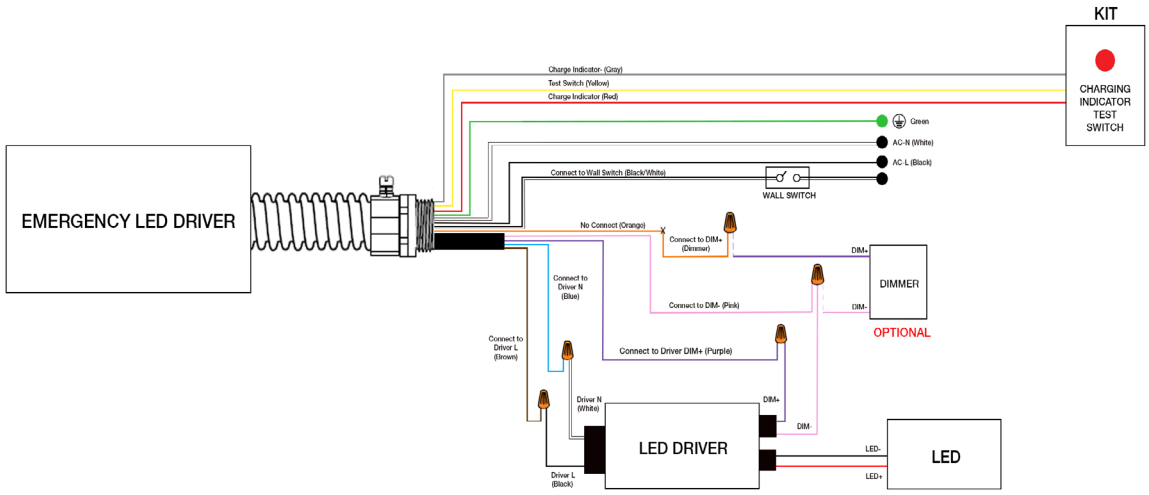

CONTROL SPEC

Model	Type	Mounting	Coverage	Input	Function	Programmable
CONTROL-XFAC (see page 6 for detail)	Fixture Controller	-	-	100-277VAC	Bluetooth On/Off/Dimming Scheduling	AVI-ON Bluetooth Mobile App



CONTROL-XFAC

DLA-G2 SERIES WET LOCATION DOWNLIGHT

CONTROL-XFAC SPEC

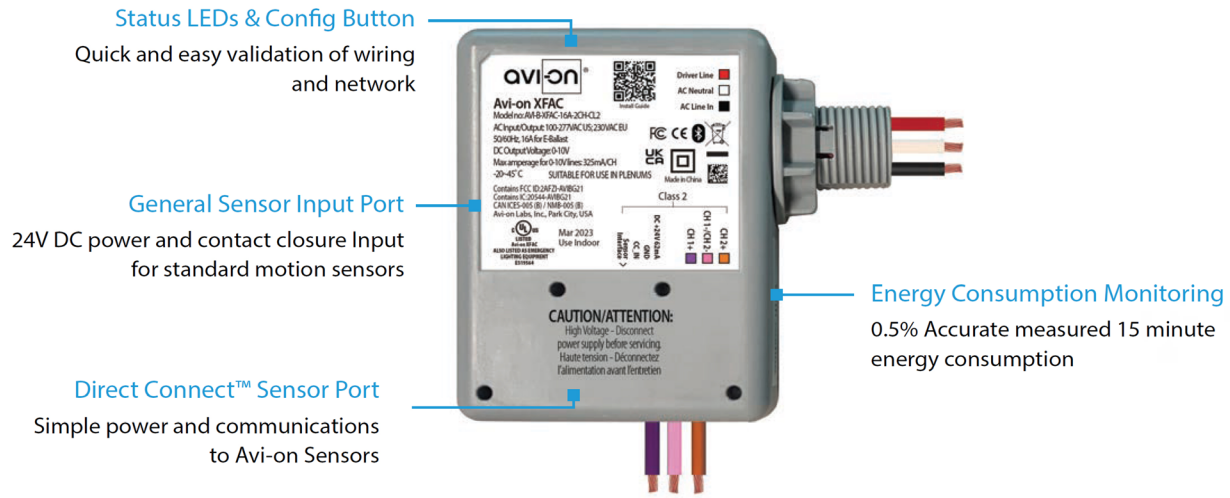

SPECIFICATIONS

INPUT VOLTAGE:	100-277VAC
CURRENT:	MIN: 20 / 14mA MAX: 81 / 46mA
0-10V DIMMING:	100-277VAC
SIZE:	3.58" x 3.58" x 1.57" (91mm x 91mm x 40mm)
STORAGE TEMP:	-40°F to + 185°F (-40°C to + 85°C)
OPERATING TEMP:	-4°F to + 113°F (-20°C to + 45°C)
RADIO FREQUENCY:	50/60Hz
RELAY CURRENT:	16A
PROTECTION/IMMUNITY:	LEVEL 4 Contact Discharge: ± 8kV Air Discharge: ±12kV
AMPERAGE FOR 0-10V LINES:	325mA / CH
WARRANTY:	5 years
REGULATORY:	FCC: 2AFZI-AVIBG21 IC: 20544-AVBG21 BQB: D059595, DID: 185220 UL 924, 2043

WIRING DIAGRAM

