FR6A SERIES BULLET FLOODLIGHT

Client:
Project:
Type:
Quantity:

CONSTRUCTION
Rugged die-cast aluminum housing with powder coat finish provides optimal heat dissipation and durability. Body design allows for adjustable aiming and easy installation with knuckle or yoke mounting options.



FR6A Knuckle Mount

OPTICS
Impact-resistant PC lens creates uniform light distribution and is sealed to protect LEDs against water and dust. Optic adjustable distributions available in 4Hx4V, 5Hx5V, and 6Hx6V beam angles. Anti-glare frosted lens.

ELECTRICAL
>80CRI LED.
-40°C up to 45°C (-40°F up to 113°F) maximum operating temperature.
Driver operates at 120-277V input, 50/60Hz, with 0-100% dimming.



FR6A Trunnion Mount

MOUNTING
Suitable for ground mounting.
1/2” threaded adjustable knuckle mount (+90° / -90°).
Trunnion mount.

STANDARD FINISH
Corrosion resistant Dark Bronze powder coating finish.

CERTIFICATION
IK08 Rated.
IP65 Wet location label standard.
Meets Buy America Act requirements.
All luminaires are built to UL1598 standards and bear appropriate cULus labels.
DLC® Premium (DesignLights Consortium Qualified)

WARRANTY
5 year warranty, see Limited Warranty for additional information.

Advantage Lighting Solutions® - All Rights Reserved

FR6A SERIES BULLET FLOODLIGHT

ORDER INFORMATION

EXAMPLE: FR6A 25 SC FA KN DB UD

Fixture	Series	Power & LM	CCT	Distribution	Mounting	Finish	Input
	FR6A	25	SC	FA		BK	UD

Accessories
Options

A SERIES

FR6A	Bullet Floodlight

B POWER & LM

Code	Power	LM @ 5000K	LPW
25	Field Selectable 15W / 20W / 25W	2,100 / 2,800 / 3,500	140

C CCT

SC	Field Selectable 3000K / 4000K / 5000K

D DISTRIBUTION

FA	Field Selectable 4Hx4V / 5Hx5V / 6Hx6V

E MOUNTING

KN	1/2” Knuckle Mount
TR	Trunnion Mount

F FINISH

DB	Dark Bronze Finish

G INPUT

UD	120-277V, 0-10V 0-100% Dimming

H ACCESSORIES/OPTIONS

BAA	Assembled in America, compliant with BAA (COTS)

Advantage Lighting Solutions® - All Rights Reserved

FR6A SERIES BULLET FLOODLIGHT

DIMENSIONS

Model	L1	L2	W	D
FR6A	8.98” (228mm)	6.02” (153mm)	6.61” (168mm)	5.71” (145mm)

Knuckle Mount

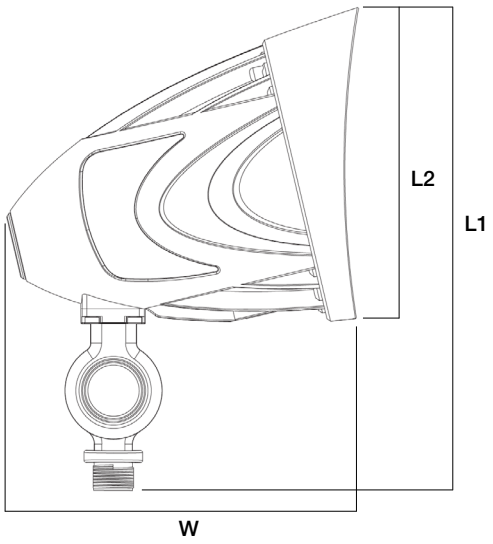

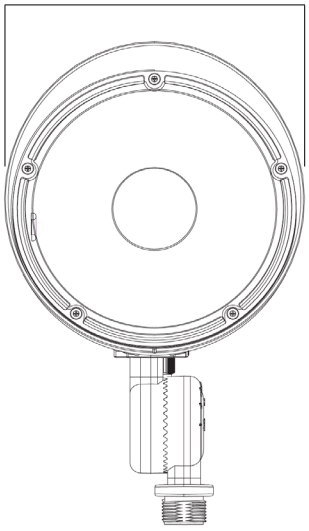

Trunnion Mount

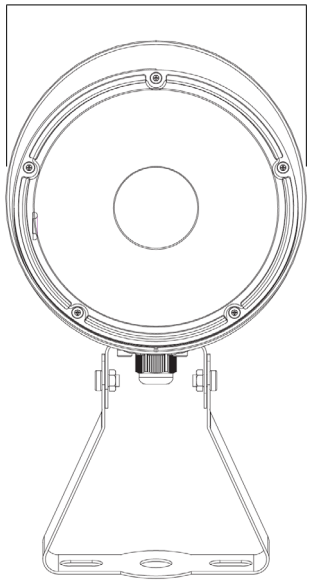

Advantage Lighting Solutions® - All Rights Reserved

FR6A SERIES BULLET FLOODLIGHT

OPTIC ADJUSTABLE



DIP Switch for
Photocell and Wattage

DIP Switch for
CCT and Distribution

Knuckle Mount

