LPC LOW UGR CURVED PANEL

Client:
Project:
Type:
Quantity:



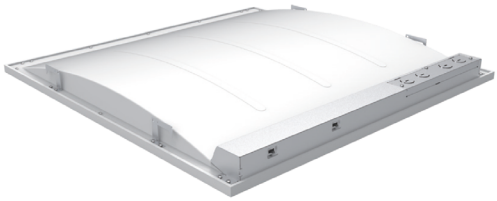

CONSTRUCTION

Aluminum frame provides durable construction. Curved panel design with PMMA light guide plate, PS diffuser, and SPCC steel back plate. Available in 2x2 and 2x4 sizes.

OPTICS

Side-emitting LED technology with a curved light guide plate provides soft, comfortable, and uniform illumination. Curved luminous surface with 90° beam angle and UGR <19 for reduced glare.

ELECTRICAL

80+ CRI.
Long-life LEDs, coupled with a high-efficiency driver, provide reliable illumination for extended service life. Greater than 50,000 hours rated lifetime (L80B20 at 25°C).
Selectable lumen and CCT technology allows easy field-adjustable capability.
Driver operates at 120-277V input, 0-10V dimmable driver.
Power factor greater than 0.9. THD ≤20%.
Operating temperature: -13°F to +104°F (-25°C to +40°C).

MOUNTING

Designed to accommodate lay-in ceilings, Slot T, and T-bar suspension system for 5/8" and 3/8" width. Built-in earthquake clips come standard.
Surface/cable mount applications, use surface/cable kit accessories.
Plaster or sheetrock installations, select flange kit.
Hard ceiling application, select hard ceiling kit.

SENSORS (OPTIONAL)

CONTROL-LVFA AVI-ON Bluetooth Mesh Controller.

STANDARD FINISH

RAL9016 White Finish

CERTIFICATION

Meets Buy America Act requirements.
IP20 Rating for Indoor Use.

WARRANTY

5 year warranty, see Limited Warranty for additional information.

Advantage Lighting Solutions® - All Rights Reserved
Specifications are subject to change without notice

LPC LOW UGR CURVED PANEL

ORDER INFORMATION — EXAMPLE: LPC 2 WHUD

Fixture	Series	Model	Finish	Input
	LPC		WH	UD

Mounting

Accessories
Options

A SERIES

LPC	LED Edgelit Troffer Panel

B MODEL

Code	Size	Power	CCT	lm/W (avg.)
2	2x2	25W / 30W / 40W	3500K / 4000K / 5000K	125lm/W
4	2x4	30W / 40W / 50W	3500K / 4000K / 5000K	125lm/W

C FINISH

WH	White

D INPUT

UD	120-277V, 0-10V Dimming

E MOUNTING

blank	Standard lay-in
MOUNT-LP-22-FGK	1.52” Tall 2x2 Flange Kit (Plaster, Sheetrock or Drywall)
MOUNT-LP-24-FGK	1.52” Tall 2x4 Flange Kit (Plaster, Sheetrock or Drywall)
MOUNT-LP-22-SMK	4” Tall 2x2 Surface Mount Kit for LPA backlit
MOUNT-LP-24-SMK	4” Tall 2x4 Surface Mount Kit for LPA backlit
MOUNT-LP-PMK	Aircraft Cable Pendant Mount

F ACCESSORIES/OPTIONS

BAA	Assembled in America, compliant with BAA (COTS)
EMB-H08170*	90-Minute Self-Diagnostic Emergency Battery 8W 100-347VAC Input 170VDC Output
EMB-H18170*	90-Minute Self-Diagnostic Emergency Battery 18W 100-347VAC Input 170VDC Output
CONTROL-LVFA*	AVI-ON Bluetooth Mesh Control System

*see page 4 for sensor and emb spec

Advantage Lighting Solutions® - All Rights Reserved

LPC LOW UGR CURVED PANEL

DIMENSIONS

Model	L	W	D
LPC-2	23.70” (603mm)	23.70” (603mm)	2” (50mm)
LPC-4	47.72” (1212mm)	23.70” (603mm)	2” (50mm)

LPC-2

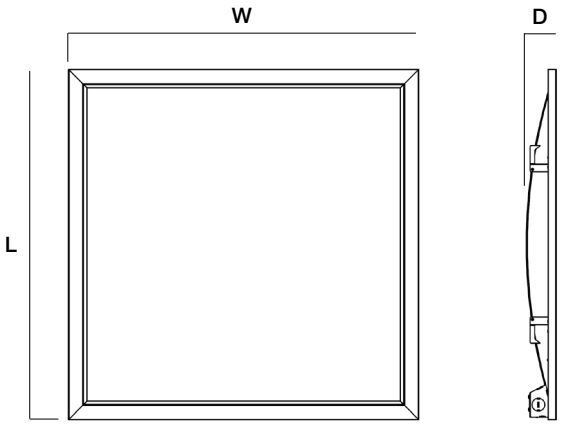

LPC-4

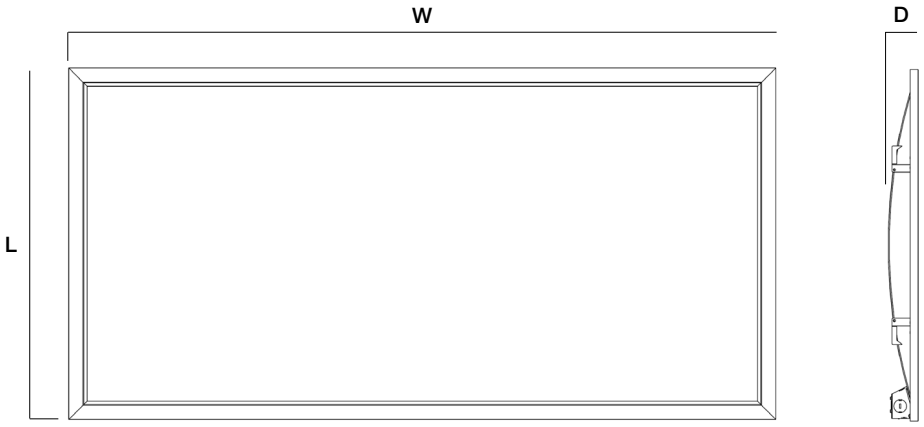

Advantage Lighting Solutions® - All Rights Reserved
Specifications are subject to change without notice

LPC LOW UGR CURVED PANEL

SENSOR SPEC

Model	Type	Mounting	Coverage	Input	Function	Programmable
CONTROL-LVFA (see page 6 for detail)	-	-	-	12V DC	Bluetooth Mesh On/Off/Dimming Scheduling	AVI-ON Bluetooth Mobile App



CONTROL-LVFA

EMB SPEC

Model	Battery Capacity	Input	Output	Output Power	Operating Temp	Installation
EMB-H08170	90mins	100-347VAC	170VDC	8W	0°C ~ 50°C 32°F ~ 122°F	Factory or Field Install
EMB-H18170	90mins	100-347VAC	170VDC	18W	0°C ~ 50°C 32°F ~ 122°F	Factory or Field Install

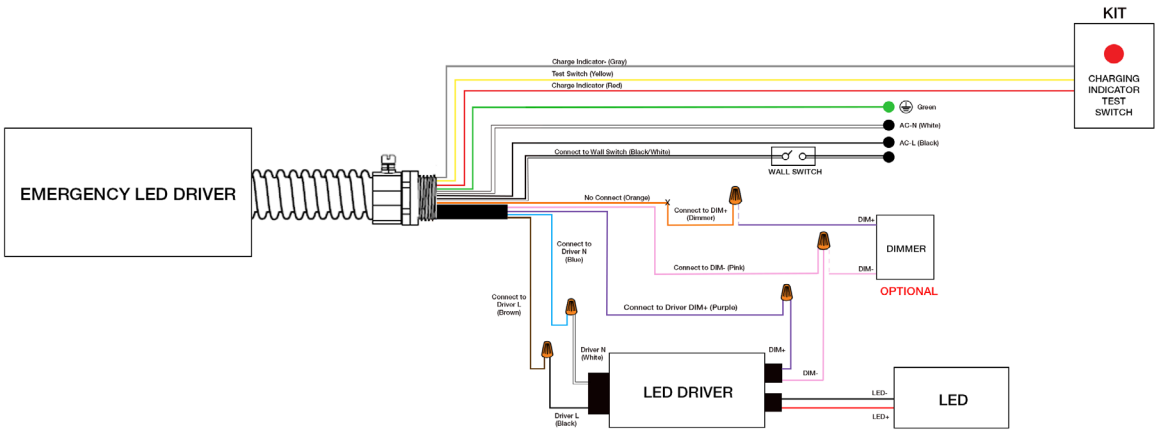

LPC LOW UGR CURVED PANEL

CONTROL-LVFA SPEC

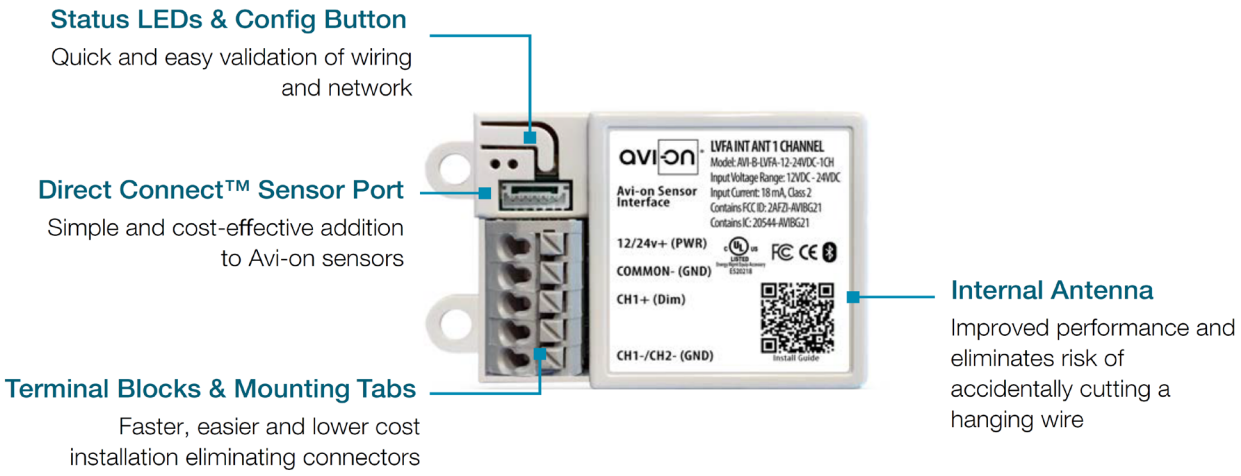

SPECIFICATIONS

INPUT VOLTAGE: 12-24VDC
CURRENT: 15mA without a Sensor
19mA with a DC PIR Sensor
48mA with a DC Microwave Sensor
0-10V DIMMING: 12-24VDC
SIZE: 2.30in x 1.43in x 0.75in
(58.2mm x 36.4mm x 19mm)
MOUNTING: Removable mounting tabs
WEIGHT: 0.45 oz (16g)
OPERATING TEMP: -22°F to +158°F (-30°C to + 70°C)

RADIO FREQUENCY: 2.4GHz
WIRELESS STANDARD: BLE 4.2 with Mesh
POINT TO POINT RANGE*: 80ft with obstructions
350ft unobstructed
SECURITY: AES 128-bit encryption for device to device communication
AES 256-bit encryption for device to cloud communication
WARRANTY: 5 years; 10 years optional
REGULATORY: FCC: 2AFZI-AVI1010 B
IC: 20544-AVI1010 B
BQB: D031801, DID: 86303
UL 916, 2043 (Plenum Rated)

*When communicating through the mesh, range is essentially unlimited (5000ft+)

WIRING DIAGRAM

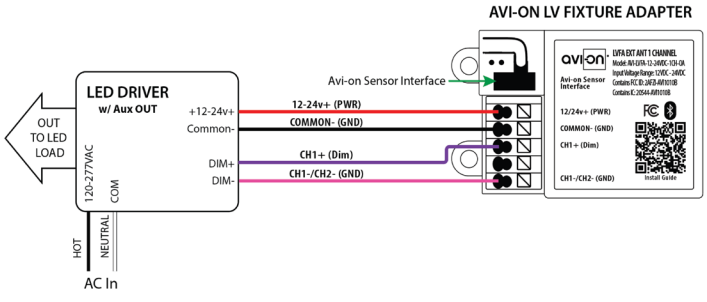

Fixture adapter powered by LED driver auxiliary output

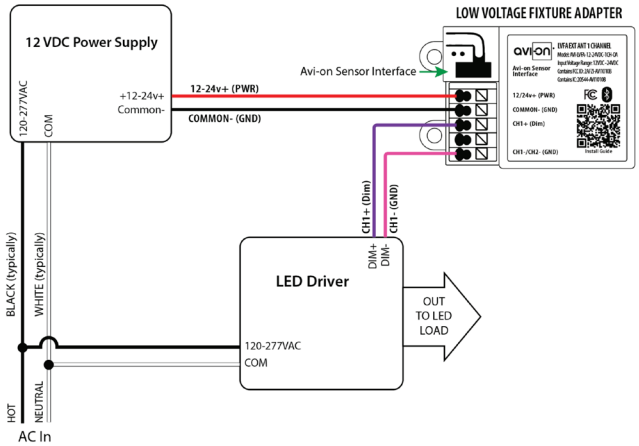

Fixture adapter connected to LED driver and using power supply