Client:
Project:
Type:
Quantity:

WPE-G2 SERIES WALL MOUNT EGRESS

CONSTRUCTION

Architectural style wall pack, modern design, die-cast aluminum housing provides excellent thermal management.
Integral battery ideal for wall mount egress lighting.

OPTICS

Prismatic polycarbonate lens.
Selectable CCT Light engines 3000K / 4000K / 5000K (80+ CRI).

ELECTRICAL

80+ CRI LED.
10W 1,400lm under AC mode, 863lm under Emergency Battery mode.
20W 2,507lm under AC mode, 896lm under Emergency Battery mode.
-20°C up to 45°C (-4°F to 113°F) maximum operating temperature.
>54,000 hr LED at L70.
Driver operates at 120-277V input, 50/60Hz, <20% THD, 0.9 power factor.
4.8V 1800mAh Nickel Cadmium Battery, Backup time greater than 90mins.
Internal solid-state transfer switch automatically connects the internal battery to LED board for minimum 90-minute emergency illumination.
Fully automatic solid-state, two-rate charger initiates battery charging to recharge a discharged battery in 24 hours.
Switchable integral photocell included (on/off switch).

MOUNTING

Surface mount via back plate that fits most standard size junction boxes.
Conduit mount via rigid conduit entry provision on top of the unit.

SHIPPING DATA

Product	Measurement	Weight
WPE-G2	10”L x 7”W x 3”H	5 lb

STANDARD FINISH

Corrosion resistant Black powder coating finish.
Corrosion resistant Dark Bronze finish.

CERTIFICATION

Wet Location Listed.
Meets Buy America Act requirements.
All luminaires are built to UL1598 standards and bear appropriate cULus labels.
For Emergency application, equipped with UL924 certified battery packs.

WARRANTY

5 year warranty, see Limited Warranty for additional information.

WPE-G2 SERIES WALL MOUNT EGRESS

ORDER INFORMATION

EXAMPLE: WPE-G2 10 SC BK U P EM

Fixture	Series	Power & LM	CCT	Finish	Input
	WPE-G2		SC		U P EM

Options

A SERIES

WPE-G2	Wall Mount Egress Gen 2

B POWER & LM

Code	Power	AC Mode	LM/W	EM Mode
10	10W	1400lm	140	863
20	20W	2660lm	133	896

C CCT

SC	Field Selectable 3000K / 4000K / 5000K

D FINISH

Standard

BK	Black
DB	Dark Bronze

E INPUT

U-P-EM	120-277V w/ Integral Photocell & Emergency Battery *see page 4 for spec

F OPTIONS

BAA	Assembled in America, compliant with BAA (COTS)

WPE-G2 SERIES WALL MOUNT EGRESS

DIMENSIONS

Model	L	W	D
WPE-G2-10 WPE-G2-20	9.7” (247mm)	6.5” (165mm)	2.5” (63mm)

Front

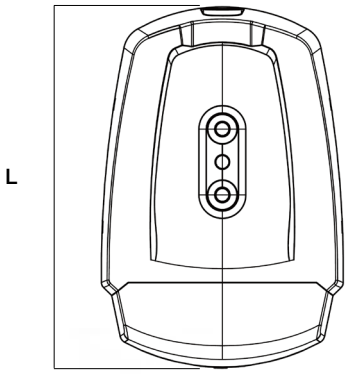

Side

Bottom

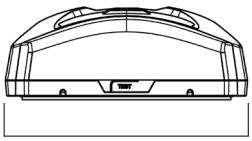

SENSOR SPEC

Model	Type	Mounting	Coverage	Input	Function	Programmable
PH	-	-	-	Universal	Dusk-to-Dawn Control	On/Off Switchable

Built-in Photocell