TRVA VOLUMETRIC TROFFER

Client:
Project:
Type:
Quantity:



CONSTRUCTION

SPCC steel back plate with white finish. Low-profile architectural troffer available in 2’ × 2’ and 2’ × 4’ sizes. Fixture is IK08 impact rated and designed for recessed or surface-mounted installation. Non-IC rated for dry locations.

OPTICS

Low UGR <19 side-emitting LED design utilizes secondary reflection to provide uniform indirect illumination across the entire light-emitting surface. Extra-wide 130° beam angle provides soft, visually comfortable light without direct visibility of the light source.

ELECTRICAL

90+ CRI standard.
High-efficiency LED system delivers up to 120 lm/W.
Five-level selectable wattage allows easy field-adjustable output.
2’ × 2’ model selectable from 20W to 40W.
2’ × 4’ model selectable from 35W to 60W.
Five selectable CCT settings: 2700K, 3000K, 3500K, 4000K, 5000K.
Driver operates at 120–277V, 0–10V 1% dimmable driver.

SENSORS/CONTROLS (OPTIONAL)

CONTROL-LVFA AVI-ON Bluetooth Mesh Control System
CONTROL-BLE-620 Bluetooth Wireless Fixture Controller for CCT Tuning, Dimming, Grouping, Scheduling Features (ALS Control Mobile App)

MOUNTING

Designed for recessed installation in standard ceiling systems.
Surface-mounted applications use appropriate surface-mount accessories.

STANDARD FINISH

White finish.

CERTIFICATION

IK08 Rated.
Suitable for dry locations.
Meets Buy America Act requirements.

WARRANTY

5 year warranty, see Limited Warranty for additional information.

Advantage Lighting Solutions® - All Rights Reserved
Specifications are subject to change without notice

ALS®
Advantage Lighting Solutions

TRVA VOLUMETRIC TROFFER

ORDER INFORMATION — EXAMPLE: TRVA 2 WH

Fixture	Series	Model	Finish	Input
	TRVA		WH	

Mounting

Accessories
Options

A SERIES

TRVA	Volumetric Troffer

B MODEL

Code	Size	Power	CCT	Output
2	2x2	20W / 25W / 30W / 35W / 40W	3000K / 3500K / 4000K / 5000K / 6500K	2,400lm ~ 4,800lm
4	2x4	35W / 40W / 45W / 55W / 60W	3000K / 3500K / 4000K / 5000K / 6500K	4,200m ~ 7,200lm

C FINISH

WH	White

D INPUT

blank	120-277V, 0-10V 1% Dimming

G MOUNTING

blank	Standard lay-in
MOUNT-LP-14-FGK	1.52” Tall 1x4 Flange Kit (Plaster, Sheetrock or Drywall)
MOUNT-LP-22-FGK	1.52” Tall 2x2 Flange Kit (Plaster, Sheetrock or Drywall)
MOUNT-LP-24-FGK	1.52” Tall 2x4 Flange Kit (Plaster, Sheetrock or Drywall)
MOUNT-LP-14-SMK	4” Tall 1x4 Surface Mount Kit
MOUNT-LP-22-SMK	4” Tall 2x2 Surface Mount Kit
MOUNT-LP-24-SMK	4” Tall 2x4 Surface Mount Kit

H ACCESSORIES/OPTIONS

BAA	Assembled in America, compliant with BAA (COTS)
ZENOR-DIODE*	Custom Output Controller, specify **Wattage / Lumen Value** _____
CONTROL-LVFA*	AVI-ON Bluetooth Mesh Control System
CONTROL-BLE-620*	Bluetooth Wireless Fixture Controller for CCT Tuning, Dimming, Grouping, Scheduling Features (ALS Control Mobile App)
EMB-H08170*	90-Minute Self-Diagnostic Emergency Battery 8W 100-347VAC Input 170VDC Output
EMB-H18170*	90-Minute Self-Diagnostic Emergency Battery 18W 100-347VAC Input 170VDC Output
EMB-H40170*	90-Minute Self-Diagnostic Emergency Battery 40W 100-347VAC Input 170VDC Output
GTD-ESRLUD**	Emergency Battery Generator Transfer Device 120-277 VAC Input
-C	3/8” x 6FT Steel Flex 5-18AWG Solid 6’ leads BLK/WH/GRN/PUR/PNK & 3/8” Die Cast Screw-In Locknut Connectors

*see page 6 for sensor and emb specs

**see page 8 and 9 and GTD spec

Advantage Lighting Solutions® - All Rights Reserved
Specifications are subject to change without notice

TRVA VOLUMETRIC TROFFER

DIMENSIONS

Model	L	W	H
TRVA-2	23.76" (603mm)	23.76" (603mm)	3.63" (92mm)
TRVA-4	23.76" (603mm)	47.80" (1213mm)	3.63" (92mm)

TRVA-2

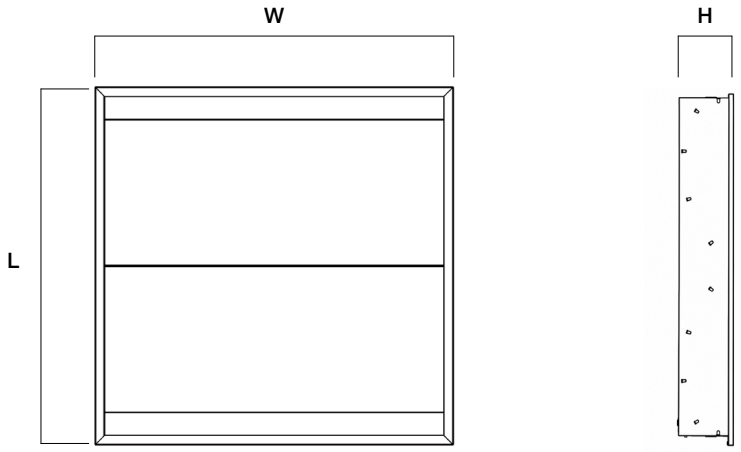

TRVA-4

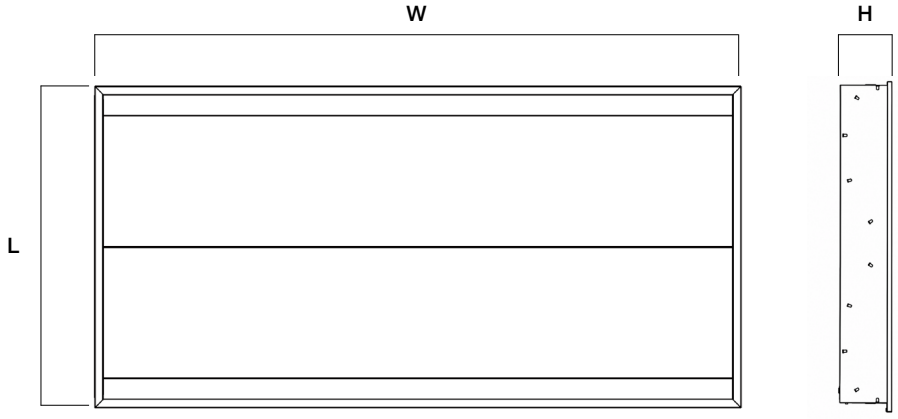

Advantage Lighting Solutions® - All Rights Reserved
Specifications are subject to change without notice

OUTPUT

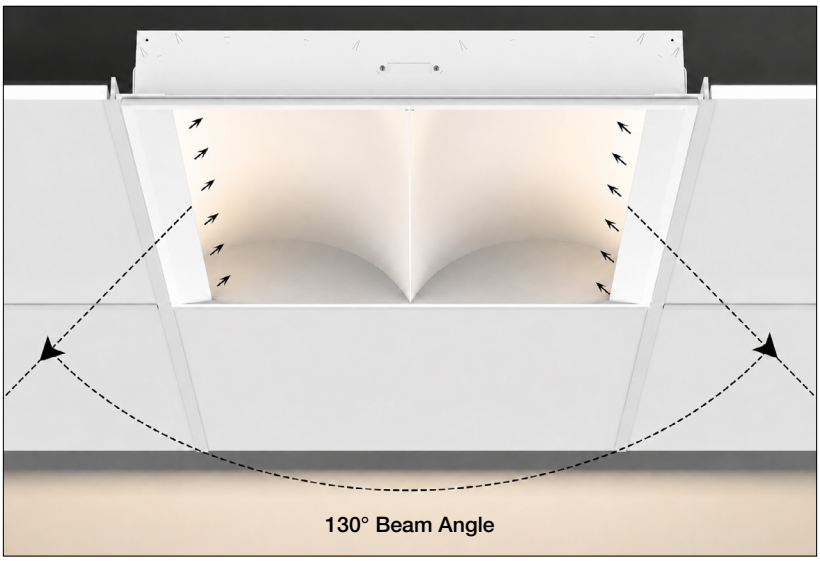

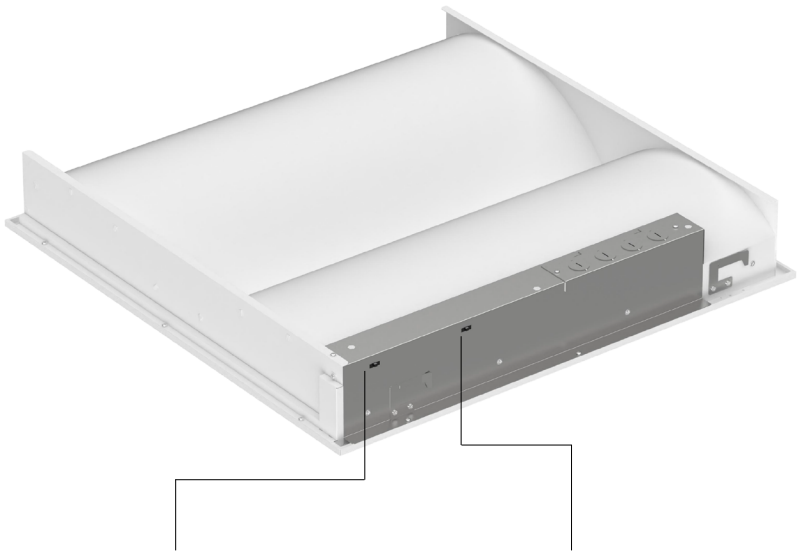

Field Selectable CCT
2700K / 3000K / 3500K / 4000K / 5000K

Field Selectable Wattage
TRVA-2: 20W / 25W / 30W / 35W / 40W
TRVA-4: 35W / 40W / 45W / 55W / 60W

Advantage Lighting Solutions® - All Rights Reserved
Specifications are subject to change without notice

ALS®
Advantage Lighting Solutions

TRVA VOLUMETRIC TROFFER

PERFORMANCE DATA

MODEL	SYSTEM WATTS	SIZE	VOLTAGE	LUMEN	LPW
TRVA-2	20W	2x2	120-277V	2400	120
	25W	2x2	120-277V	3000	120
	30W	2x2	120-277V	3600	120
	35W	2x2	120-277V	4200	120
	40W	2x2	120-277V	4800	120
TRVA-4	35W	2x4	120-277V	4200	120
	40W	2x4	120-277V	4800	120
	45W	2x4	120-277V	5400	120
	55W	2x4	120-277V	6600	120
	60W	2x4	120-277V	7200	120

DLC CODE

Part Number	DLC Part Nnumber	DLC Class
TRVA-2	pending	Premium
TRVA-4	pending	Premium

TRVA VOLUMETRIC TROFFER

Model	Type	Mounting	Coverage	Input	Function	Programmable
ZENOR-DIODE	Output Controller	Integral to Fixture	-	0-10V	Cap Maximum Output	Specify Max Wattage / Lumen
CONTROL-LVFA (see page 6 for detail)	Fixture Controller	Integral to Fixture	-	12V DC	Bluetooth Mesh On/Off/Dimming Scheduling	AVI-ON Bluetooth Mobile App
CONTROL-BLE-620 (see page 7 for detail)	Fixture Controller	Integral to Fixture	-	12V DC	CCT Tuning Dimming Grouping Time Schedule	ALS Control Bluetooth Mobile App



ZENOR-DIODE



CONTROL-BLE-620



CONTROL-LVFA

EMB SPEC

Model	Battery Capacity	Input	Output	Output Power	Operating Temp	Installation
EMB-H08170	90mins	100-347VAC	170VDC	8W	0°C ~ 50°C 32°F ~ 122°F	Factory or Field Install
EMB-H18170	90mins	100-347VAC	170VDC	18W	0°C ~ 50°C 32°F ~ 122°F	Factory or Field Install
EMB-H40170	90mins	100-347VAC	170VDC	40W	0°C ~ 50°C 32°F ~ 122°F	Factory or Field Install

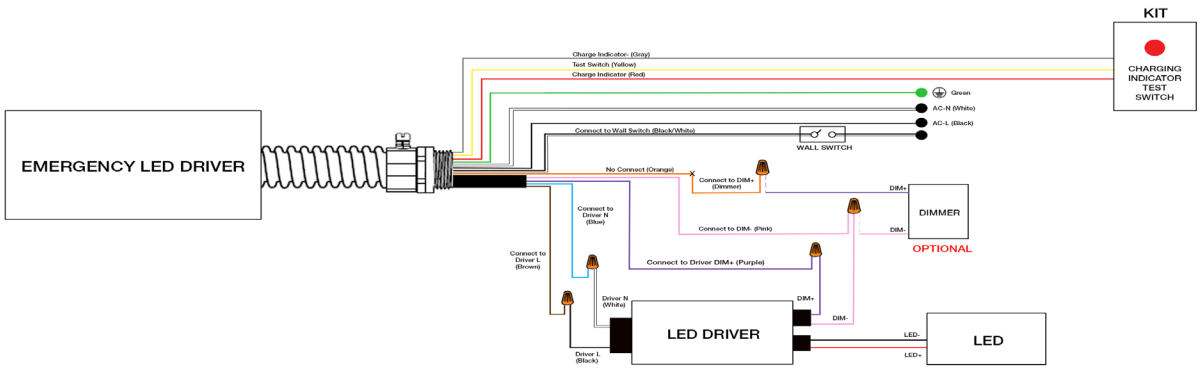

TRVA VOLUMETRIC TROFFER

CONTROL-LVFA SPEC

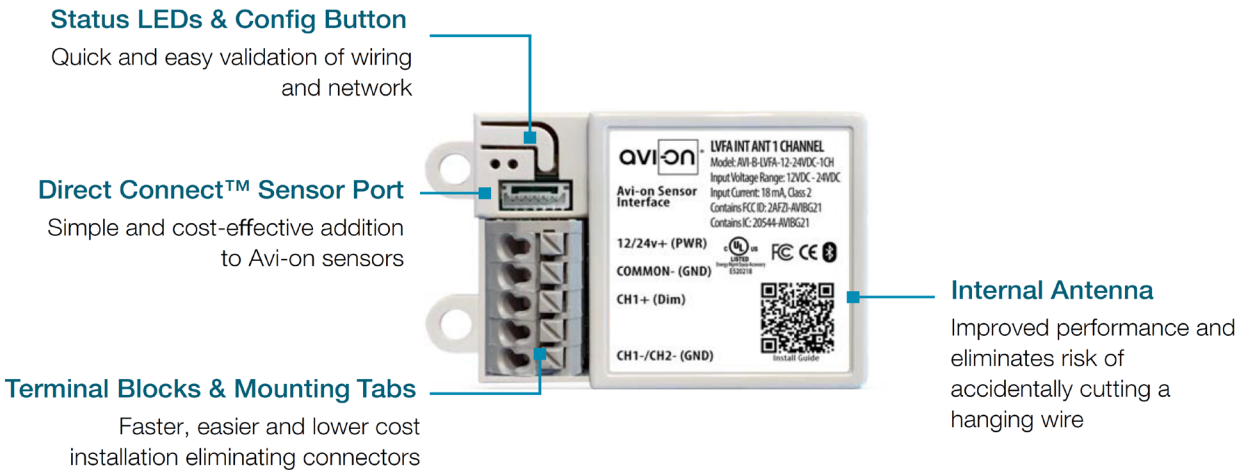

SPECIFICATIONS

INPUT VOLTAGE: 12-24VDC
CURRENT: 15mA without a Sensor
19mA with a DC PIR Sensor
48mA with a DC Microwave Sensor
0-10V DIMMING: 12-24VDC
SIZE: 2.30in x 1.43in x 0.75in
(58.2mm x 36.4mm x 19mm)
MOUNTING: Removable mounting tabs
WEIGHT: 0.45 oz (16g)
OPERATING TEMP: -22°F to +158°F (-30°C to + 70°C)

RADIO FREQUENCY: 2.4GHz
WIRELESS STANDARD: BLE 4.2 with Mesh
POINT TO POINT RANGE*: 80ft with obstructions
350ft unobstructed
SECURITY: AES 128-bit encryption for device to device communication
AES 256-bit encryption for device to cloud communication
WARRANTY: 5 years; 10 years optional
REGULATORY: FCC: 2AFZI-AVI1010 B
IC: 20544-AVI1010 B
BQB: D031801, DID: 86303
UL 916, 2043 (Plenum Rated)

*When communicating through the mesh, range is essentially unlimited (5000ft+)

WIRING DIAGRAM

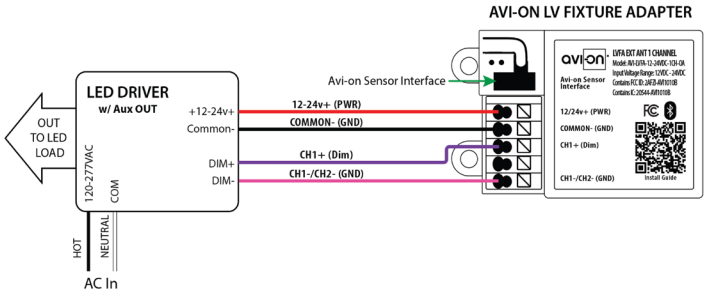

Fixture adapter powered by LED driver auxiliary output

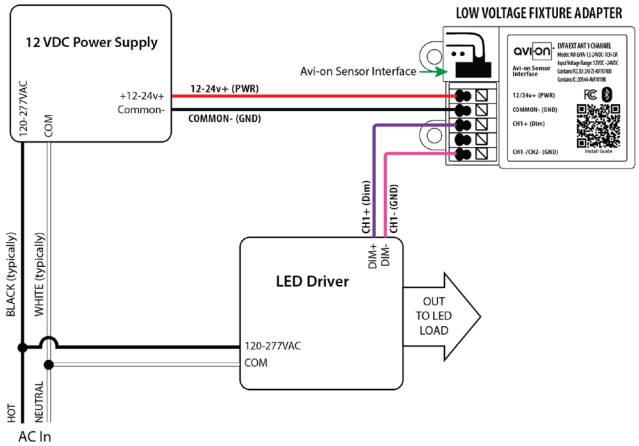

Fixture adapter connected to LED driver and using power supply

ALS CONTROL

CONTROL-BLE-620 BLUETOOTH CONTROLER

Client:
Project:
Type:
Quantity:

FEATURE

- **Installation:** Factory installed, 12V AUX power required
- **Commissioning:** Wirelessly through ALS Control Mobile App (iOS / Android)
- **Certification:** DLC 5.1 Networked Lighting Control System
- **Control:** Dimming, High-End Trim, Zoning, Continuous Bi-level Dimming
- **CCT Tuning:** CCT Tuning feature for Dual/Multi-CCT LED board fixture only
- **Sensor:** Plug-N-Play with ALS Control sensors
- **Zone Control:** Zoning and Grouping control, Scheduling



SPECIFICATIONS

WIRELESS STANDARDS:	5.0 Bluetooth Mesh
INPUT VOLTAGE:	12-14VDC, >50mA
OUTPUT VOLTAGE:	LED Max. 150VDC Max. 2A
CONTROL OUTPUT:	0-10V
OPERATING TEMP:	-40°F ~ +158°F (-40°C ~ +70°C)
COMMISSIONING RANGE:	50FT
BLUETOOTH RANGE:	100FT
WARRANTY:	5 years
IP RATING:	IP20

DIMENSIONS

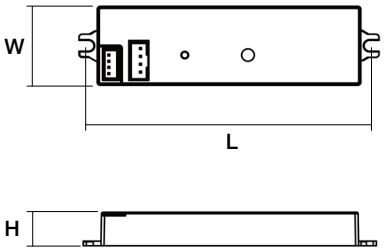

L	H	W
3.5” (89mm)	0.43” (11mm)	1.00” (26mm)

Lead Wire	Antenna Wire
10.60” (270mm)	10.60” (270mm)

WIRING DIAGRAM

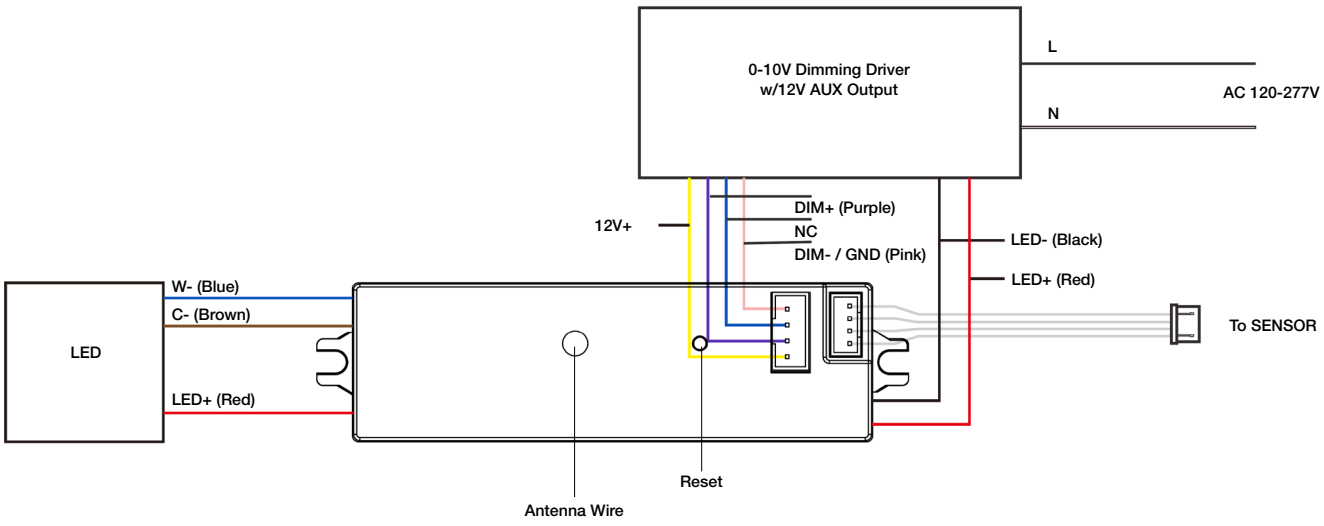

c UL us LISTED

Quick Ship

Download on the App Store

GET IT ON Google Play

ALS®
Advantage Lighting Solutions

GTD-ESRLUD Generator Transfer Device

Client:
Project:
Type:
Quantity:

CONSTRUCTION

Yellow metal casing. Integrates with dry contact systems to provide lighting during power outages. Features a slim enclosure, allowing for seamlessly integrating into existing building infrastructure.
Designed for commercial and industrial applications that require an emergency load to be switched on during a loss of normal power.

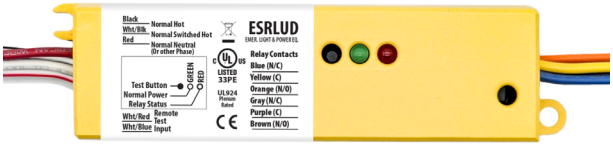

SPECIFICATIONS

COIL CURRENT:	Normal Power = 6mA MAX
COIL VOLTAGE INPUT:	120-277V AC (50/60 Hz)
EXPECTED RELAY LIFE:	10 Million Cycles Min Mechanical
RELAY CONTACT RATINGS:	10 Amp Resistive @ 30 V DC 10 Amp General Use @ 277 V AC
OPERATING TEMP:	-30°F ~ +140°F (-34°C ~ +60°C)
OPERATE TIME:	18ms
HUMIDITY RANGE:	5-95% (Noncondensing)
LED:	Green = Normal Power Red = Relay Status
DIMENSIONS:	1.40”H x 5.63”W x 1.00”D
WIRES:	16”, 600V Rated
OVERRIDE (TEST SWITCH):	No
APPROVALS:	UL924, C-UL, CE, ROHS
NOTES:	Device Draws no Current From Emergency Source

TESTING

INITIAL TEST FOR CORRECT WIRING:	Apply Normal Power To Normal Power Input a. Green LED (Normal Power) should be ON b. Red LED (Relay Status) should be ON c. Load should be OFF d. Relay Contact (N/O) should be CLOSED
LOCAL TEST BUTTON:	1. Turn Switched Circuit OFF. Load be OFF. 2. Press and Hold “Local Test Button” 3. Load should Turn ON 4. Release “Local Test Button” and Emergency Light should Turn OFF.
WALL SWITCH:	1. Turn ON Wall Switch If not already ON 2. Load should Turn ON 3. Turn Wall Switch OFF 4. Load will Turn OFF

TROUBLESHOOTING

CONDITION	ACTION
Green LED is OFF	• Check Normal Power Input Wiring (Black and Red Wires) and Voltage.
Red LED is OFF but Load is OFF	• Check Bulbs and Ballast. • Check Load Wiring (Blue Wire and Load’s Neutral). • Replace Unit. (Assuming N/C Contact is Used).
Load is ON but Red LED is ON	• Replace Unit. (Assuming N/C Contact is Used).
Red LED does not Turn OFF and Load does not Turn ON when being tested	• Check Bulbs and Ballast. • Check Wiring Connections if Using a Remote Test Option. • Press Local Test Button on the Unit. • Replace Unit.
Red LED will not Turn ON and Load will not Turn OFF	• Verify Status of Normal Power Input. • Open Wall Switch Input. • Verify That No Test Inputs are Stuck Closed.

Advantage Lighting Solutions® - All Rights Reserved
Specifications are subject to change without notice

GTD-ESRLUD Generator Transfer Device

WIRING DIAGRAM

USING EMERGENCY LIGHTING AS NORMAL LIGHTING

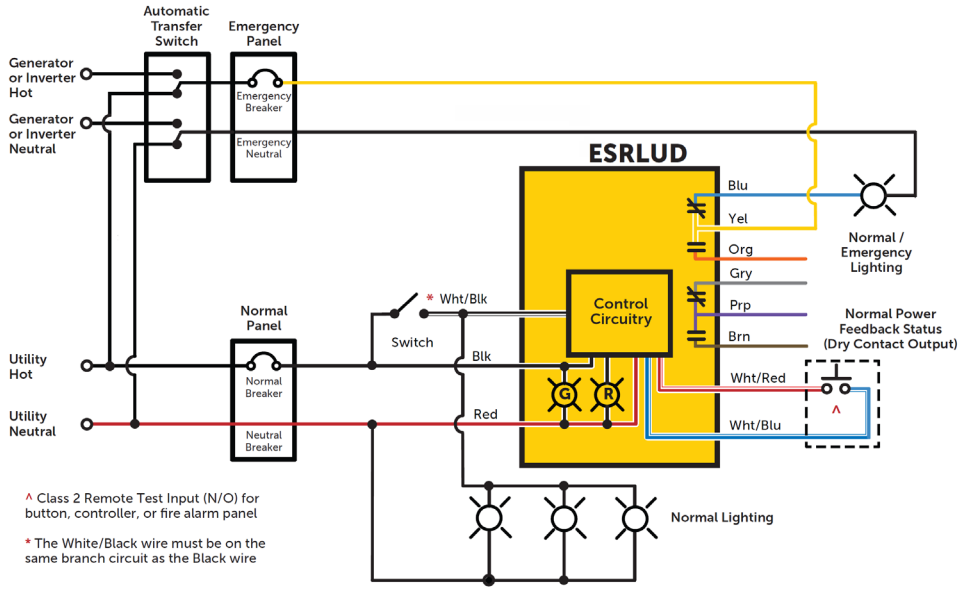

OVERRIDING A 0-10V DIMMER

