Client:
Project:
Type:
Quantity:

TRDI SERIES DIRECT / INDIRECT LED TROFFER

TRDI-2

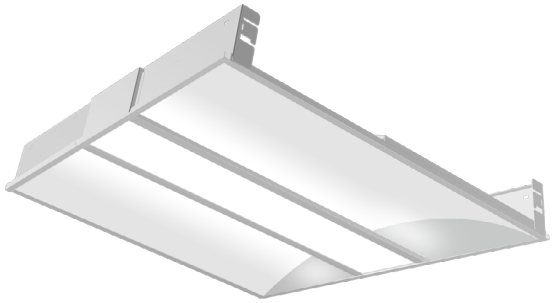

CONSTRUCTION

22-gauge metal frame, 95% reflective white polyester powder coat bonded to phosphate-free multi-stage pretreated metal. All parts painted after fabrication to facilitate installation, increase efficiency and inhibit corrosion. All corners are rounded for safe handling. Multiple wiring entrances on driver enclosure for easy access. Integral T-bar clips for installation into T-grid ceilings.

OPTICS

Edgelit design with semi-transparent optic lens offers exceptional direct / indirect distribution and maximum visual comfort.

ELECTRICAL

Long-life LEDs, coupled with a high-efficiency driver, provide superior illumination for extended service life. Greater than 70% LED lumen maintenance at 60,000 hours (L70>60,000).
Selectable lumen and CCT technology allows easy field-adjustable capability, luminaire ships with maximum output and 4000K CCT setting.
All CCTs are within 3 MacAdam ellipses.
Driver operates at 120-277V input, 0-10V dimmable driver, down to 10%.

CONTROL (OPTIONAL)

CONTROL-XFAC AVI-ON Bluetooth Zone Controller Adapter
CONTROL-BLE-620 Bluetooth Wireless Fixture Controller for CCT Tuning, Dimming, Grouping, Scheduling Features (ALS Control Mobile App)

SHIPPING DATA

Product	Measurement	Weight
TRDI-2	24”L x 24”W x 8”H	6 lb
TRDI-4	48”L x 24”W x 8”H	14 lb

MOUNTING

Designed to accommodate lay-in ceilings, Slot T, and T-bar suspension system for 5/8” and 3/8” width.
Built-in earthquake clips come standard.
Plaster or sheetrock installations, select flange kit.

STANDARD FINISH

High Reflective White finish.

CERTIFICATION

Damp location label standard.
Meets Buy America Act requirements.
US Patented Product
All luminaires are built to UL1598 standards and bear appropriate cULus labels.
For Emergency application, equipment with UL924 certified battery packs.
DLC® Premium (DesignLights Consortium Qualified).

WARRANTY

Standard 5 year warranty.

TRDI SERIES DIRECT / INDIRECT LED TROFFER

ORDER INFORMATION

EXAMPLE: TRDI 2

	Series	Model	Finish	Input
Fixture	TRDI		blank	blank
Mounting				
Accessories Options				

A SERIES

TRDI	Selectable Lumen and CCT Direct / Indirect LED Troffer

B MODEL

Code	Size	Power	CCT	Output
2	2x2	20W / 30W / 40W	3000K / 3500K / 4000K	up to 4400lm
4	2x4	30W / 40W / 50W	3000K / 3500K / 4000K	up to 5500lm

C FINISH

blank	White

D INPUT

blank	120-277V, 0-10V Dimming

G MOUNTING

blank	Standard lay-in
MOUNT-LP-22-FGK	1.52” Tall 2x2 Flange Kit (Plaster, Sheetrock or Drywall)
MOUNT-LP-24-FGK	1.52” Tall 2x4 Flange Kit (Plaster, Sheetrock or Drywall)

H ACCESSORIES/OPTIONS

BAA	Assembled in America, compliant with BAA (COTS)
EMB-H08170**	90-Minute Self-Diagnostic Emergency Battery 8W 100-347VAC Input 170VDC Output
EMB-H18170**	90-Minute Self-Diagnostic Emergency Battery 18W 100-347VAC Input 170VDC Output
EMB-H40170**	90-Minute Self-Diagnostic Emergency Battery 40W 100-347VAC Input 170VDC Output
CONTROL-XFAC*	AVI-ON Bluetooth Zone Controller Adapter
CONTROL-BLE-620*	Bluetooth Wireless Fixture Controller for CCT Tuning, Dimming, Grouping, Scheduling Features (ALS Control Mobile App)
GTD-ESRLUD***	Emergency Battery Generator Transfer Device 120-277 VAC Input
-C	3/8” x 6FT Steel Flex 5-18AWG Solid 6’ leads BLK/WH/GRN/PUR/PNK & 3/8” Die Cast Screw-In Locknut Connectors

*see page 4 for sensor spec

**see page 5 for emb spec

***see page 8 and 9 for GTD spec

TRDI SERIES DIRECT / INDIRECT LED TROFFER

DIMENSIONS

Model	W	L	H
TRDI-2	23.76” (603mm)	23.76” (603mm)	3.5” (89mm)
TRDI-4	23.76” (603mm)	47.80” (1213mm)	3.5” (89mm)

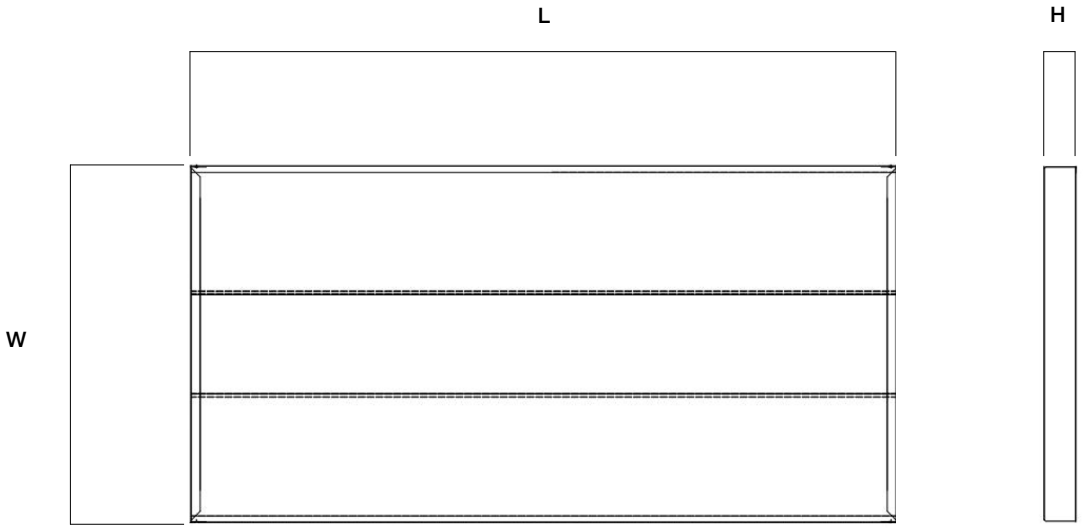

TRDI SERIES DIRECT / INDIRECT LED TROFFER

PERFORMANCE DATA

SYSTEM WATTS	SIZE	VOLTAGE	LUMEN	LPW	QTY ON PALLET
20W	2x2	120-277V	2200	110	70
30W	2x2	120-277V	3300	110	70
40W	2x2	120-277V	4400	110	70
30W	2x4	120-277V	3300	110	40
40W	2x4	120-277V	4400	110	40
50W	2x4	120-277V	5500	110	40

SENSOR SPEC

Model	Type	Mounting	Coverage	Input	Function	Programmable
CONTROL-XFAC (see page 6 for detail)	Fixture Controller	-	-	12V DC	Bluetooth Mesh On/Off/Dimming Scheduling	AVI-ON Bluetooth Mobile App
CONTROL-BLE-620 (see page 7 for detail)	Fixture Controller	Integral to Fixture	-	12V DC	CCT Tuning Dimming Grouping Time Schedule	ALS Control Bluetooth Mobile App

CONTROL-BLE-620

CONTROL-XFAC

TRDI SERIES DIRECT / INDIRECT LED TROFFER

EMB SPEC

Model	Compatible Fixture	Battery Capacity	Input	Output	Output Power	Operating Temp	Installation
EMB-H08170	TRDI-2 TRDI-4	90mins	100-347VAC	170VDC	8W	0°C ~ 50°C 32°F ~ 122°F	Factory or Field Install
EMB-H18170	TRDI-2 TRDI-4	90mins	100-347VAC	170VDC	18W	0°C ~ 50°C 32°F ~ 122°F	Factory or Field Install
EMB-H40170	TRDI-2 TRDI-4	90mins	100-347VAC	170VDC	40W	0°C ~ 50°C 32°F ~ 122°F	Factory or Field Install

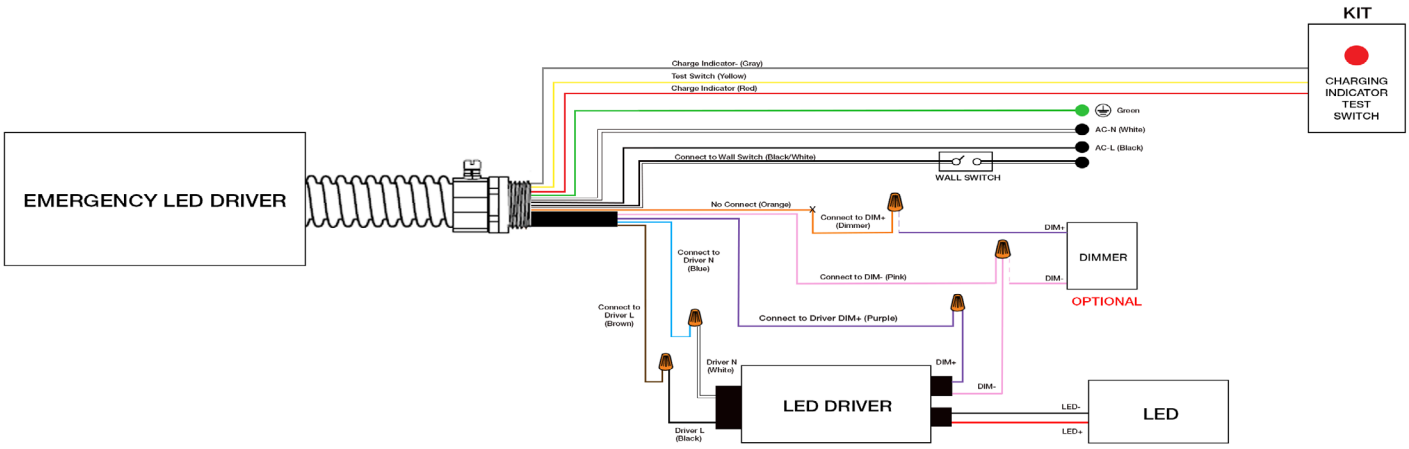

TRDI SERIES DIRECT / INDIRECT LED TROFFER

CONTROL-XFAC SPEC

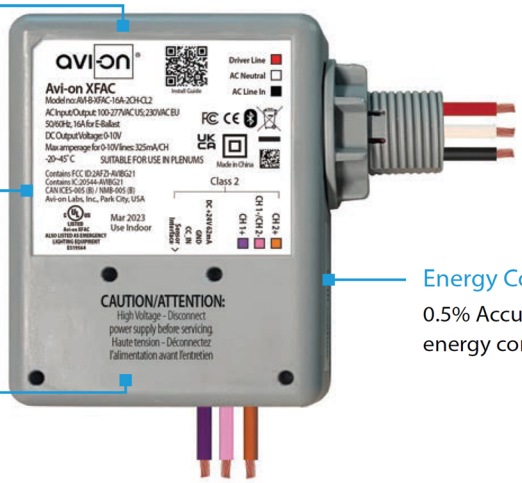

Status LEDs & Config Button
Quick and easy validation of wiring and network

General Sensor Input Port
24V DC power and contact closure Input for standard motion sensors

Direct Connect™ Sensor Port
Simple power and communications to Avi-on Sensors

Energy Consumption Monitoring
0.5% Accurate measured 15 minute energy consumption

SPECIFICATIONS

INPUT VOLTAGE:	100-277VAC
CURRENT:	MIN: 20 / 14mA MAX: 81 / 46mA
0-10V DIMMING:	100-277VAC
SIZE:	3.58" x 3.58" x 1.57" (91mm x 91mm x 40mm)
STORAGE TEMP:	-40°F to + 185°F (-40°C to + 85°C)
OPERATING TEMP:	-4°F to + 113°F (-20°C to + 45°C)
RADIO FREQUENCY:	50/60Hz
RELAY CURRENT:	16A
PROTECTION/IMMUNITY:	LEVEL 4 Contact Discharge: ± 8kV Air Discharge: ±12kV
AMPERAGE FOR 0-10V LINES:	325mA / CH
WARRANTY:	5 years
REGULATORY:	FCC: 2AFZI-AVIBG21 IC: 20544-AVBG21 BQB: D059595, DID: 185220 UL 924, 2043

WIRING DIAGRAM

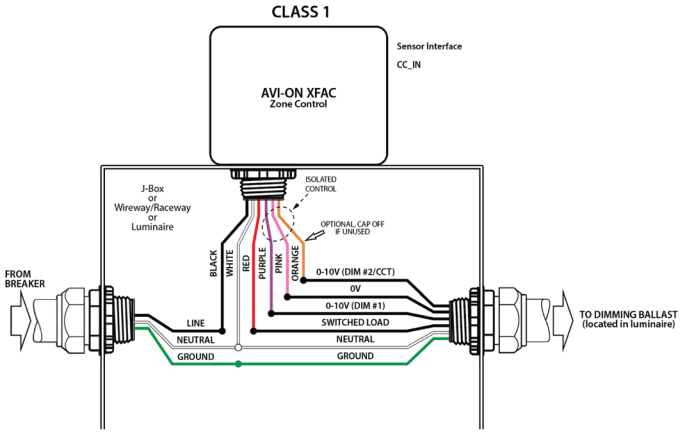

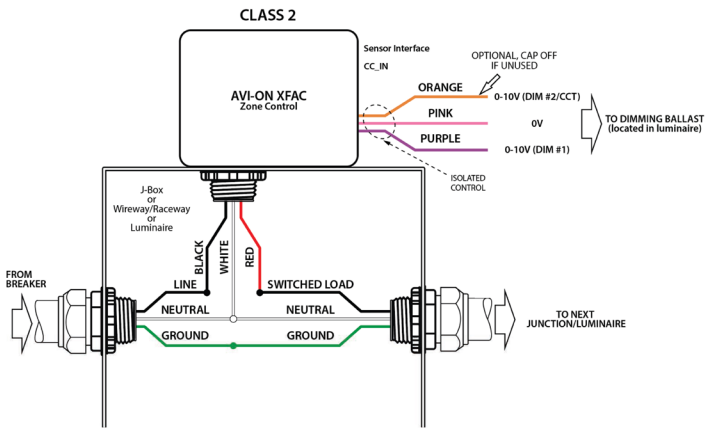

ALS CONTROL

CONTROL-BLE-620 BLUETOOTH CONTROLLER

Client:
Project:
Type:
Quantity:

FEATURE

- **Installation:** Factory installed, 12V AUX power required
- **Commissioning:** Wirelessly through ALS Control Mobile App (iOS / Android)
- **Certification:** DLC 5.1 Networked Lighting Control System
- **Control:** Dimming, High-End Trim, Zoning, Continuous Bi-level Dimming
- **CCT Tuning:** CCT Tuning feature for Dual/Multi-CCT LED board fixture only
- **Sensor:** Plug-N-Play with ALS Control sensors
- **Zone Control:** Zoning and Grouping control, Scheduling

SPECIFICATIONS

WIRELESS STANDARDS:	5.0 Bluetooth Mesh
INPUT VOLTAGE:	12-14VDC, >50mA
OUTPUT VOLTAGE:	LED Max. 150VDC Max. 2A
CONTROL OUTPUT:	0-10V
OPERATING TEMP:	-40°F ~ +158°F (-40°C ~ +70°C)
COMMISSIONING RANGE:	50FT
BLUETOOTH RANGE:	100FT
WARRANTY:	5 years
IP RATING:	IP20

DIMENSIONS

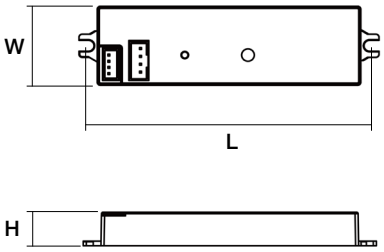

L	H	W
3.5” (89mm)	0.43” (11mm)	1.00” (26mm)

Lead Wire	Antenna Wire
10.60” (270mm)	10.60” (270mm)

WIRING DIAGRAM

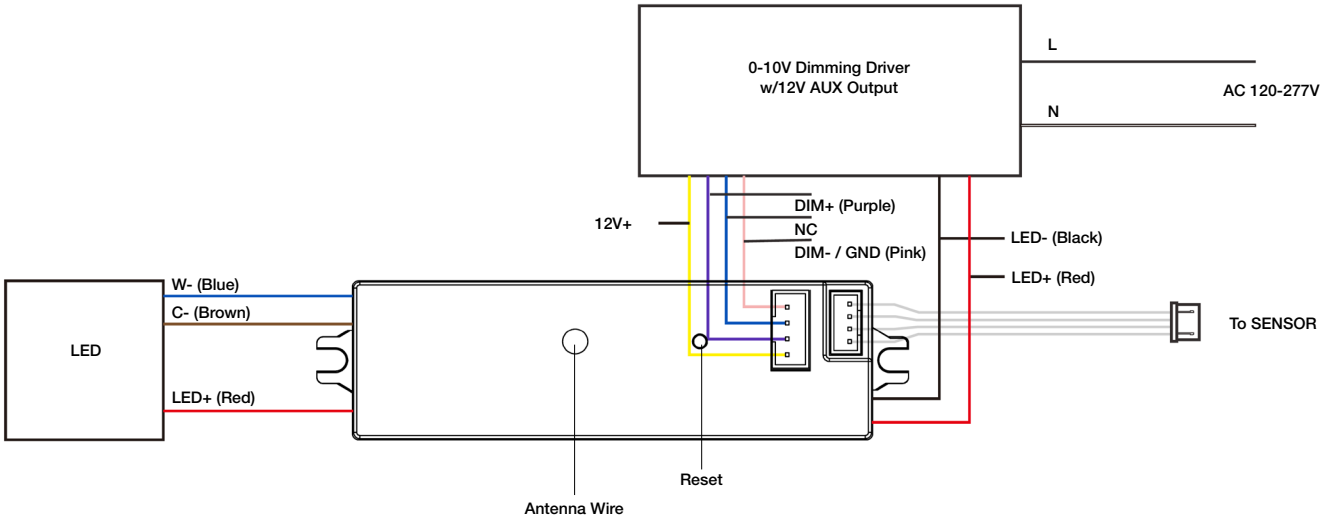

Client:
Project:
Type:
Quantity:

GTD-ESRLUD Generator Transfer Device

CONSTRUCTION

Yellow metal casing. Integrates with dry contact systems to provide lighting during power outages. Features a slim enclosure, allowing for seamlessly integrating into existing building infrastructure.
Designed for commercial and industrial applications that require an emergency load to be switched on during a loss of normal power.

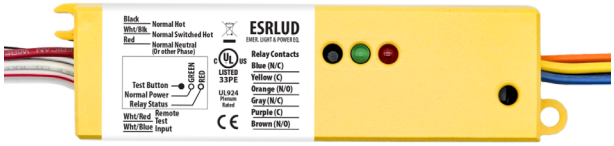

SPECIFICATIONS

COIL CURRENT:	Normal Power = 6mA MAX
COIL VOLTAGE INPUT:	120-277V AC (50/60 Hz)
EXPECTED RELAY LIFE:	10 Million Cycles Min Mechanical
RELAY CONTACT RATINGS:	10 Amp Resistive @ 30 V DC 10 Amp General Use @ 277 V AC
OPERATING TEMP:	-30°F ~ +140°F (-34°C ~ +60°C)
OPERATE TIME:	18ms
HUMIDITY RANGE:	5-95% (Noncondensing)
LED:	Green = Normal Power Red = Relay Status
DIMENSIONS:	1.40”H x 5.63”W x 1.00”D
WIRES:	16”, 600V Rated
OVERRIDE (TEST SWITCH):	No
APPROVALS:	UL924, C-UL, CE, ROHS
NOTES:	Device Draws no Current From Emergency Source

TESTING

INITIAL TEST FOR CORRECT WIRING:	Apply Normal Power To Normal Power Input a. Green LED (Normal Power) should be ON b. Red LED (Relay Status) should be ON c. Load should be OFF d. Relay Contact (N/O) should be CLOSED
LOCAL TEST BUTTON:	1. Turn Switched Circuit OFF. Load be OFF. 2. Press and Hold “Local Test Button” 3. Load should Turn ON 4. Release “Local Test Button” and Emergency Light should Turn OFF.
WALL SWITCH:	1. Turn ON Wall Switch If not already ON 2. Load should Turn ON 3. Turn Wall Switch OFF 4. Load will Turn OFF

TROUBLESHOOTING

CONDITION	ACTION
Green LED is OFF	• Check Normal Power Input Wiring (Black and Red Wires) and Voltage.
Red LED is OFF but Load is OFF	• Check Bulbs and Ballast. • Check Load Wiring (Blue Wire and Load’s Neutral). • Replace Unit. (Assuming N/C Contact is Used).
Load is ON but Red LED is ON	• Replace Unit. (Assuming N/C Contact is Used).
Red LED does not Turn OFF and Load does not Turn ON when being tested	• Check Bulbs and Ballast. • Check Wiring Connections if Using a Remote Test Option. • Press Local Test Button on the Unit. • Replace Unit.
Red LED will not Turn ON and Load will not Turn OFF	• Verify Status of Normal Power Input. • Open Wall Switch Input. • Verify That No Test Inputs are Stuck Closed.

Advantage Lighting Solutions® - All Rights Reserved

WIRING DIAGRAM

USING EMERGENCY LIGHTING AS NORMAL LIGHTING

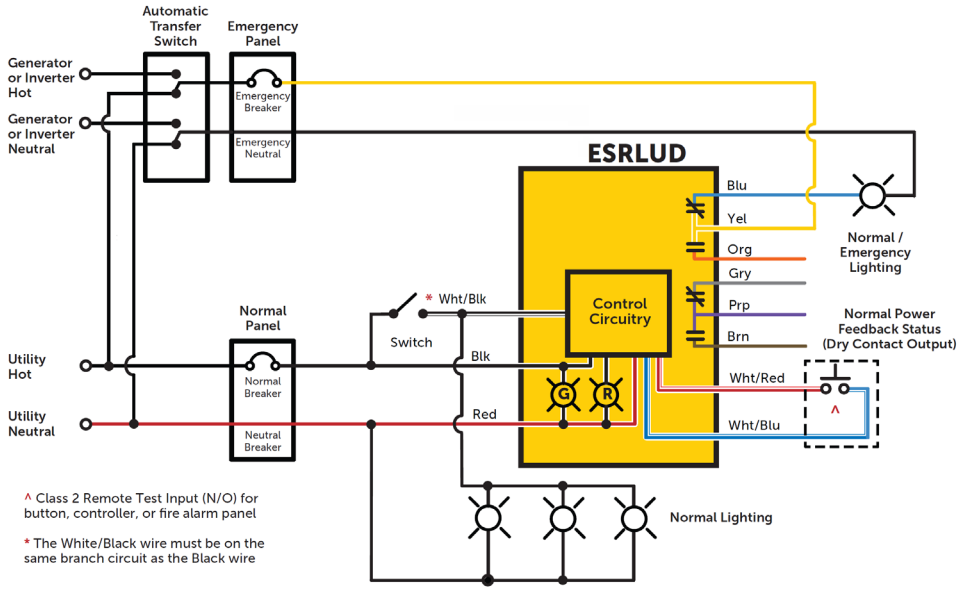
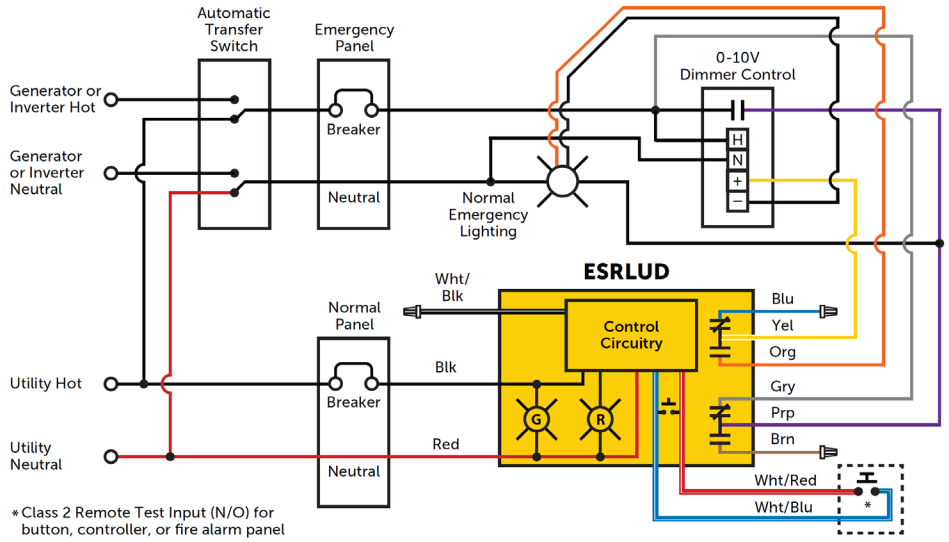
OVERRIDING A 0-10V DIMMER